INSTRUCTION MANUAL

# SDM-CAN Datalogger-to-CANbus Interface

Revision: 3/18

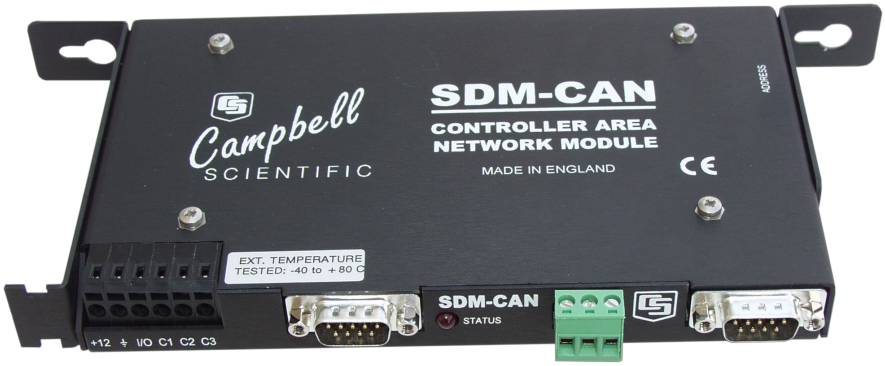


Copyright © 2001-2018
Campbell Scientific, Inc.

# Limited Warranty

"Products manufactured by CSI are warranted by CSI to be free from defects in materials and workmanship under normal use and service for twelve months from the date of shipment unless otherwise specified in the corresponding product manual. (Product manuals are available for review online at *www.campbellsci.com*.) Products not manufactured by CSI, but that are resold by CSI, are warranted only to the limits extended by the original manufacturer. Batteries, fine-wire thermocouples, desiccant, and other consumables have no warranty. CSI's obligation under this warranty is limited to repairing or replacing (at CSI's option) defective Products, which shall be the sole and exclusive remedy under this warranty. The Customer assumes all costs of removing, reinstalling, and shipping defective Products to CSI. CSI will return such Products by surface carrier prepaid within the continental United States of America. To all other locations, CSI will return such Products best way CIP (port of entry) per Incoterms ® 2010. This warranty shall not apply to any Products which have been subjected to modification, misuse, neglect, improper service, accidents of nature, or shipping damage. This warranty is in lieu of all other warranties, expressed or implied. The warranty for installation services performed by CSI such as programming to customer specifications, electrical connections to Products manufactured by CSI, and Product specific training, is part of CSI's product warranty. **CSI EXPRESSLY DISCLAIMS AND EXCLUDES ANY IMPLIED WARRANTIES OF MERCHANTABILITY OR FITNESS FOR A PARTICULAR PURPOSE**. **CSI hereby disclaims, to the fullest extent allowed by applicable law, any and all warranties and conditions with respect to the Products, whether express, implied or statutory, other than those expressly provided herein.**"

# Assistance

Products may not be returned without prior authorization. The following contact information is for US and international customers residing in countries served by Campbell Scientific, Inc. directly. Affiliate companies handle repairs for customers within their territories. Please visit *www.campbellsci.com* to determine which Campbell Scientific company serves your country.

To obtain a Returned Materials Authorization (RMA) number, contact CAMPBELL SCIENTIFIC, INC., phone (435) 227-9000. Please write the issued RMA number clearly on the outside of the shipping container. Campbell Scientific's shipping address is:

**CAMPBELL SCIENTIFIC, INC.**
RMA#_____
815 West 1800 North
Logan, Utah 84321-1784

For all returns, the customer must fill out a "Statement of Product Cleanliness and Decontamination" form and comply with the requirements specified in it. The form is available from our website at *www.campbellsci.com/repair*. A completed form must be either emailed to *repair@campbellsci.com* or faxed to (435) 227-9106. Campbell Scientific is unable to process any returns until we receive this form. If the form is not received within three days of product receipt or is incomplete, the product will be returned to the customer at the customer's expense. Campbell Scientific reserves the right to refuse service on products that were exposed to contaminants that may cause health or safety concerns for our employees.

# Safety

DANGER — MANY HAZARDS ARE ASSOCIATED WITH INSTALLING, USING, MAINTAINING, AND WORKING ON OR AROUND **TRIPODS, TOWERS, AND ANY ATTACHMENTS TO TRIPODS AND TOWERS SUCH AS SENSORS, CROSSARMS, ENCLOSURES, ANTENNAS, ETC**. FAILURE TO PROPERLY AND COMPLETELY ASSEMBLE, INSTALL, OPERATE, USE, AND MAINTAIN TRIPODS, TOWERS, AND ATTACHMENTS, AND FAILURE TO HEED WARNINGS, INCREASES THE RISK OF DEATH, ACCIDENT, SERIOUS INJURY, PROPERTY DAMAGE, AND PRODUCT FAILURE. TAKE ALL REASONABLE PRECAUTIONS TO AVOID THESE HAZARDS. CHECK WITH YOUR ORGANIZATION'S SAFETY COORDINATOR (OR POLICY) FOR PROCEDURES AND REQUIRED PROTECTIVE EQUIPMENT PRIOR TO PERFORMING ANY WORK.

Use tripods, towers, and attachments to tripods and towers only for purposes for which they are designed. Do not exceed design limits. Be familiar and comply with all instructions provided in product manuals. Manuals are available at www.campbellsci.com or by telephoning (435) 227-9000 (USA). You are responsible for conformance with governing codes and regulations, including safety regulations, and the integrity and location of structures or land to which towers, tripods, and any attachments are attached. Installation sites should be evaluated and approved by a qualified engineer. If questions or concerns arise regarding installation, use, or maintenance of tripods, towers, attachments, or electrical connections, consult with a licensed and qualified engineer or electrician.

General

- Prior to performing site or installation work, obtain required approvals and permits. Comply with all governing structure-height regulations, such as those of the FAA in the USA.
- Use only qualified personnel for installation, use, and maintenance of tripods and towers, and any attachments to tripods and towers. The use of licensed and qualified contractors is highly recommended.
- Read all applicable instructions carefully and understand procedures thoroughly before beginning work.
- Wear a **hardhat** and **eye protection**, and take **other appropriate safety precautions** while working on or around tripods and towers.
- **Do not climb** tripods or towers at any time, and prohibit climbing by other persons. Take reasonable precautions to secure tripod and tower sites from trespassers.
- Use only manufacturer recommended parts, materials, and tools.

Utility and Electrical

- **You can be killed** or sustain serious bodily injury if the tripod, tower, or attachments you are installing, constructing, using, or maintaining, or a tool, stake, or anchor, come in **contact with overhead or underground utility lines**.
- Maintain a distance of at least one-and-one-half times structure height, 20 feet, or the distance required by applicable law, **whichever is greater**, between overhead utility lines and the structure (tripod, tower, attachments, or tools).
- Prior to performing site or installation work, inform all utility companies and have all underground utilities marked.
- Comply with all electrical codes. Electrical equipment and related grounding devices should be installed by a licensed and qualified electrician.

Elevated Work and Weather

- Exercise extreme caution when performing elevated work.
- Use appropriate equipment and safety practices.
- During installation and maintenance, keep tower and tripod sites clear of un-trained or non-essential personnel. Take precautions to prevent elevated tools and objects from dropping.
- Do not perform any work in inclement weather, including wind, rain, snow, lightning, etc.

Maintenance

- Periodically (at least yearly) check for wear and damage, including corrosion, stress cracks, frayed cables, loose cable clamps, cable tightness, etc. and take necessary corrective actions.
- Periodically (at least yearly) check electrical ground connections.

WHILE EVERY ATTEMPT IS MADE TO EMBODY THE HIGHEST DEGREE OF SAFETY IN ALL CAMPBELL SCIENTIFIC PRODUCTS, THE CUSTOMER ASSUMES ALL RISK FROM ANY INJURY RESULTING FROM IMPROPER INSTALLATION, USE, OR MAINTENANCE OF TRIPODS, TOWERS, OR ATTACHMENTS TO TRIPODS AND TOWERS SUCH AS SENSORS, CROSSARMS, ENCLOSURES, ANTENNAS, ETC.

# Table of Contents

*PDF viewers: These page numbers refer to the printed version of this document. Use the PDF reader bookmarks tab for links to specific sections.*


**1. Introduction ..... 1**

1.1 General Description ..... 1
1.2 Specifications ..... 2
1.2.1 General Features and Specifications ..... 2
1.2.2 Electrical Specifications ..... 3
1.2.2.1 Power Consumption ..... 3
1.2.3 Physical Specifications ..... 4

**2. Installation ..... 4**

2.1 Address Switch Configuration ..... 4
2.2 Internal Jumper Settings ..... 5
2.3 Connection to the Datalogger and Power Supply ..... 8
2.3.1 LED Status Indication ..... 10
2.4 Connection to CAN-Bus. ..... 10

**3. Programming CR10X, CR7 and CR23X Dataloggers to use the SDM-CAN ..... 12**

3.1 General Principles ..... 12
3.2 System Limitations ..... 13
3.3 The Datalogger Instruction ..... 14
3.3.1 Instruction 118: SDM-CAN ..... 15
3.3.2 SDM Address (Parameter 01:) ..... 15
3.3.3 TQUANTA, TSEG1, TSEG2 (Parameters 02:, 03:, 04:) ..... 15
3.3.4 ID (Parameters 05:, 06:, 07:) ..... 17
3.3.5 Data Type (Parameter 08:) ..... 18
3.3.5.1 Collect and retrieve a data value: ..... 19
3.3.5.2 Build a data frame for transmission: ..... 19
3.3.5.3 Transmit individual data values onto the CAN-Bus: ..... 20
3.3.5.4 Transmit a previously built data frame on to the CAN-Bus (type 25): ..... 20
3.3.5.5 Set-up previously built data frame as a Remote Frame Response (type 26): ..... 21
3.3.5.6 Read error counters (type 27): ..... 21
3.3.5.7 Read and reset the error counters (type 28): ..... 21
3.3.5.8 Read status (type 29): ..... 21
3.3.5.9 Read the signature and version number of the SDM-CAN operating system (type 30): ..... 22
3.3.5.10 Send Remote Frame Request (type 31): ..... 22
3.3.5.11 Set SDM-CAN internal software switches (type 32): ..... 22
3.3.5.12 Read SDM-CAN internal switches (type 33): ..... 24
3.3.6 Start Bit Number (Parameter 09:) ..... 24
3.3.7 Number of Bits (Parameter 10:) ..... 24
3.3.8 Number of Values (Parameter 11:) ..... 25
3.3.9 Location (Parameter 12:) ..... 25

3.3.10 Multiplier (Parameter 13:) ... 25
3.3.11 Offset (Parameter 14:) ... 25
3.4 Advanced Programming Techniques ... 25
3.4.1 Interrupts Using the I/O Connection ... 25
3.4.2 Group Trigger ... 27
3.4.3 Frame buffers with filtering and triggering ... 27
3.4.3.1 Setup of Mask and Filter / trigger ... 28
3.4.3.2 Reading / Polling Buffer ... 28
3.4.3.3 Basic Sequence of Buffer Usage: ... 29
3.5 Program Examples ... 29
3.5.1 Reading CAN Data ... 29
3.5.2 Simple CAN Data Transmission ... 30
3.5.3 Building and Sending Data Frames ... 32
3.5.4 Using the Interrupt Function ... 32
3.5.5 Using the Group Trigger ... 33

**4. Programming CRBasic Dataloggers to use the SDM-CAN ... 35**

4.1 General Principles ... 35
4.1.1 High Speed Block Mode ... 35
4.2 Datalogger Instruction ... 36
4.2.1 Reading CAN Data ... 36
4.2.2 Simple CAN Data Transmission ... 37
4.2.3 Digital I/O Triggered CANbus Measurements ... 38
4.2.4 SlowSequence Instruction ... 39

**5. Using the RS232 Serial Diagnostics Port ... 39**

5.1 Connecting to the RS232 User Port ... 39
5.2 Diagnostic Commands ... 40
5.3 Loading a New Operating System into the SDM-CAN Interface ... 43

**6. Attributions ... 43**

***Appendices***

**A. Principles of Operation ... A-1**

A.1 Data Collection ... A-1
A.2 Frame Transmission ... A-2

**B. A Summary of Data Types ... B-1**

**C. Application of the SDM-CAN on Networks Complying with the J1939 SAE Standards ... C-1**

C.1 J1939 29-Bit Identifier Format ... C-1
C.2 J1939 11-Bit Identifier Format ... C-1
C.3 J1939 Data Frame Format ... C-2

C.4 Retrieving J1939 Accelerator Pedal Position Data using a CR9000/CR5000 (Bus Speed 250k Baud).....C-2
C.4.1 Encoding the Identifier Field Values .....C-2
C.4.2 Finding the Start Bit.....C-3
C.5 Retrieving J1939 Accelerator Pedal Position Data using a CR23X/CR10X (Bus Speed 250k Baud).....C-4
C.5.1 Encoding the Identifier Field Values .....C-4
C.5.2 Finding the Start Bit.....C-5

**D. Examples of CAN Data Frames and Data Encoding and Decoding.....D-1**

## *Figures*

1-1. SDM-CAN CAN-Bus Interface .....1
2-1. SDM-CAN Internal Jumpers.....7
2-2. SDM-CAN Isolation enabled (default) .....7
2-3. SDM-CAN Isolation disabled .....8
2-4. Using the Spring Loaded Terminal Blocks (Top Option) .....9
2-5. Using the Spring Loaded Terminal Blocks (Front Option).....9

## *Tables*

2-1. Switch Position and Addresses .....5
2-2. LED Status Indication .....10
2-3. CIA CAN Connector Pin Connections.....11
3-1. Typical settings of the CAN Speed Parameters .....17
5-1. RS232 Pin Out .....40
C-1. Mapping of the J1939 Fields into a 29-Bit Identifier .....C-1
C-2. Mapping of the J1939 Fields into a 11-Bit Identifier .....C-1
C-3. J1939 Data Frame Format .....C-2
C-4. Mapping of J1939 Identifier Field values into a 29-Bit Identifier....C-3
C-5. Accelerator Pedal Position Value Byte Number .....C-3
C-6. Mapping of J1939 Identifier Field Values into a 29-Bit Identifier...C-4
C-7. Accelerator Pedal Position Value Byte Number .....C-5

# SDM-CAN Datalogger-to-CANbus Interface

## 1. Introduction

The SDM-CAN interface is designed to allow a Campbell Scientific datalogger to sample data directly from a CAN-Bus communications network and thereby allow such data to be stored along with, and in synchronization with, other data values measured directly by the datalogger.

To use the SDM-CAN device it is assumed that you have a full working understanding of the CAN network you wish to monitor. While there are moves to standardize CAN networks for different types of applications, the SDM-CAN device is designed to be as generic as possible thus allowing use in a wide range of applications, including research and development, where you may be working outside the normal standards.

As a result you will need to know details of the electrical configuration of the network, the speed and CAN standard in use, plus knowledge of the identifiers of the data packets that are of interest and the way in which data is encoded within those packets at the binary level. This information may need to be obtained from the designers of the network, from proprietary documentation or from the standards to which a network claims to comply.

Campbell Scientific cannot provide full technical support in the understanding and decoding of data on all types of CAN networks.

*FIGURE 1-1. SDM-CAN CAN-Bus Interface*

### 1.1 General Description

The SDM-CAN forms an intelligent interface between a Campbell Scientific datalogger and a CAN-Bus communications network. The SDM-CAN is configured by the datalogger under the control of the user's datalogger program.

By this process the SDM-CAN can capture data on the CAN-Bus and filter out packets of interest to the user. Within each data packet the device is able to read one or more data values and convert them to numeric values compatible with the normal data stored by the datalogger.

The SDM-CAN will act as a passive listen-only device with its transmitter disabled in hardware. Alternatively it can be configured to send/respond to Remote Frame Requests, allowing it to poll remote devices for data. Data packets can also be constructed to allow it to send data out onto the CAN-Bus so it then acts as a sensor itself.

Data is transferred between the SDM-CAN interface and the datalogger using Campbell Scientific's high speed SDM communications protocol. This protocol allows the SDM-CAN to be used in parallel with other SDM devices (including other SDM-CAN interfaces) which might, for instance, be on other CAN-Bus networks in the same vehicle.

In addition to connectors to the CAN network and the datalogger, an RS232 port is also provided both for diagnostics and operating system upgrades.

## 1.2 Specifications

### 1.2.1 General Features and Specifications

- Uses Campbell Scientific's SDM communication protocol to communicate with the datalogger via a three wire serial multidrop connection. Support is planned for CR10X, CR23X, CR7, CR5000 and CR9000 dataloggers.
- Up to 16 units can be used per datalogger, with the modules' SDM address set by rotary switch.
- CAN 2.0A and 2.0B active and passive modes supported
- Up to 1Mbaud max data rate. Standard baud rates supported are 1M, 800K, 500K, 250K, 125K, 50K, 20K and lower. Other non-standard baud rates may be possible – please contact Campbell Scientific.
- Receive and transmit up to 128 different data values from up to 128 CAN ID's.
- Build and send a CAN data frame.
- Send Remote Frame Requests.
- Send data frame in response to an external Remote Frame Request.
- Supports a number of power down modes to allow power saving in power critical applications.
- All configuration of the interface is specified within the user's datalogger program.
- LED status flash at power up

- Additional I/O port for signaling to the datalogger that data is available, e.g. using an interrupt function.
- Has a 9 pin, DCE RS232 port with auto baud rate detection (1200 to 115200) for diagnosis and operating software download.
- Standard operating temperature range (tested), -25ºC to +50ºC. Can be used over an extended temperature range – contact Campbell Scientific for details.
- High speed block mode for fast data collection.
- Buffer assisted burst mode for capturing back to back high speed CAN data.
- Buffer's support data frame filtering and triggering.
- View the EU Declaration of Conformity at *www.campbellsci.com/sdm-can*

## 1.2.2 Electrical Specifications

- Power supply range: 7 to 26V DC.
- Optional (switch selectable) galvanic isolation between the datalogger and the CAN-Bus. The minimum isolation breakdown is 50V – this barrier is for signal isolation only, i.e. it is not a safety barrier.
- Hitachi H8S,16 bit CPU clocked at 10MHz.
- Uses the latest Philips SJA1000 CAN controller clocked at 16MHz.
- CAN-Bus physical interface using Philips PCA82C251 driver for 1Mbaud capability, for use in 12V or 24V systems.
- CAN-Bus physical connection conforms to CIA draft standard 102 version 2, 9 pin D connector. (The interface will differ from this standard only with respect to pin 9, which outputs 5V DC instead of 7-13V DC.)
- A 3 way, unpluggable screw terminal block for CAN High, Low and G also provided.
- Transmit and acknowledge to CAN-Bus can be disabled by a hardware jumper for safety reasons, e.g. for in-vehicle, listen only monitoring.
- I/O terminal used for interrupts is pulled low by a 100Kohm resistor and is driven to 5V via a 1Kohm impedance when an interrupt is pending.

### *1.2.2.1 Power Consumption*

- Typical active current in self-powered, isolated mode with the CAN-Bus in the recessive state: 70mA. (This is when the SDM-CAN is not transmitting.)

- Typical active current in self-powered, isolated mode with the CAN-Bus in the dominant state: 120mA (this is when data is being transmitted from the SDM-CAN device).
- Where the DC-DC converter is not used, and power is provided to the isolated CAN driver circuits by an external source, the current drain by the SDM-CAN is approximately 50 mA lower than the figures quoted above.
- Typical active current, non-isolated with the CAN-Bus in the recessive state: 30mA.
- Typical active current, non-isolated with the CAN-Bus in the dominant state: 70mA
- Typical Standby Current with or without isolation is less than 1mA (in this mode the CAN hardware is turned off so the module cannot wake on receipt of CAN data). Current consumption increases to typically 50 mA during periods of communication to the datalogger or when the RS232 port is active.

### 1.2.3 Physical Specifications

- Maximum dimensions: width 175mm, height 100mm, depth 23mm (without mounting brackets).
- Weight: 300g without mounting brackets.
- The device can be vertically mounted with all the connectors on the top surface.
- The SDM address switch is on the right hand side.
- Fittings are available to allow vertical mounting in the CR9000 or on enclosure chassis plates.

# 2. Installation

The SDM-CAN can be mounted in a normal card slot of a CR9000 (using optional special end brackets), on a chassis plate (using the standard brackets supplied) or can be left free-standing.

CR9000 and CR7 dataloggers require optional SDM connection kits and all dataloggers may require an upgrade to a version of operating system which supports the SDM-CAN interface.

## 2.1 Address Switch Configuration

Before installing the SDM-CAN, set the SDM address switch to ensure that the interface has a unique address on the SDM bus, and that the address is set to match the commands in the datalogger program relevant to each interface.

The SDM address switch can be set to 1 of 16 addresses. The factory-set address is 00. TABLE 2-1 shows switch position and the corresponding

address. The Base 4 address is also shown, as this is the address entered in the datalogger program.

Please see Section 3, *Programming CR10X, CR7 and CR23X Dataloggers to use the SDM-CAN*, before using address F (33 base 4) as this address is often used as a 'group trigger' to synchronize measurements by several SDM devices.

The switch is positioned on the right-hand side of the case, so you may have to remove the mounting bracket to gain access to this switch.

**TABLE 2-1. Switch Position and Addresses**

| Switch Setting | Base 4 Address |
|---|---|
| 0 | 00 |
| 1 | 01 |
| 2 | 02 |
| 3 | 03 |
| 4 | 10 |
| 5 | 11 |
| 6 | 12 |
| 7 | 13 |
| 8 | 20 |
| 9 | 21 |
| A | 22 |
| B | 23 |
| C | 30 |
| D | 31 |
| E | 32 |
| F | 33 |

## 2.2 Internal Jumper Settings

The SDM-CAN interface is fitted with a number of jumpers which configure the connection to the CAN network.

Prior to setting these jumpers you need to give some consideration on how best to connect the SDM-CAN interface to the network:

1) Decide whether the CAN network is already terminated, or if the SDM-CAN needs to provide termination. In most instances the network will already be terminated and so the default setting is *no termination*.

2) Decide whether to operate the SDM-CAN in a mode where it is isolated from the CAN network. This is the 'safest' mode of operation as it

minimizes the risk of corrupting the CAN data by the formation of grounds loops which could inject noise onto the CAN-Bus. The default setting is to run in *isolated mode*.

3) If running in isolated mode decide whether the SDM-CAN will supply power via a built-in DC-DC converter for the isolated CAN interface components, or whether power will be sourced from an external supply. Using a converter adds 40-50mA to the power consumption of the SDM-CAN when it is active. However, if a converter is not used, power must be provided from elsewhere (see below). The default setting is for the converter to be **OFF,** although for many applications you may need to turn it on once you have considered the implications for your power supply.

4) Decide whether the transmit functions of the SDM-CAN interface need to be enabled in hardware. The disabled mode of operation is the safest, especially in vehicle applications, as it avoids the risk of the SDM-CAN sending bad data onto the CAN network. However, in some modes of operation, transmission is obligatory e.g. to let the SDM-CAN request data, acknowledge data or to transmit data onto the bus. If transmission is to be enabled, the relevant jumpers need to be changed. Additionally transmission must be enabled by sending the SDM-CAN an instruction which both enables and specifies the method of transmission. See Section 3.3, *The Datalogger Instruction*, data type 32, below.

Access to the jumpers requires the removal of the lid of the SDM-CAN. Please follow anti-static precautions during the removal of the lid and also when changing the jumpers. Refer to FIGURE 2-1 for details of the jumper positions. Labels are also provided in white writing on the circuit board.

If white jumper block not fitted then refer to FIGURE 2-2 for isolation enabled and FIGURE 2-3 for isolation disabled.

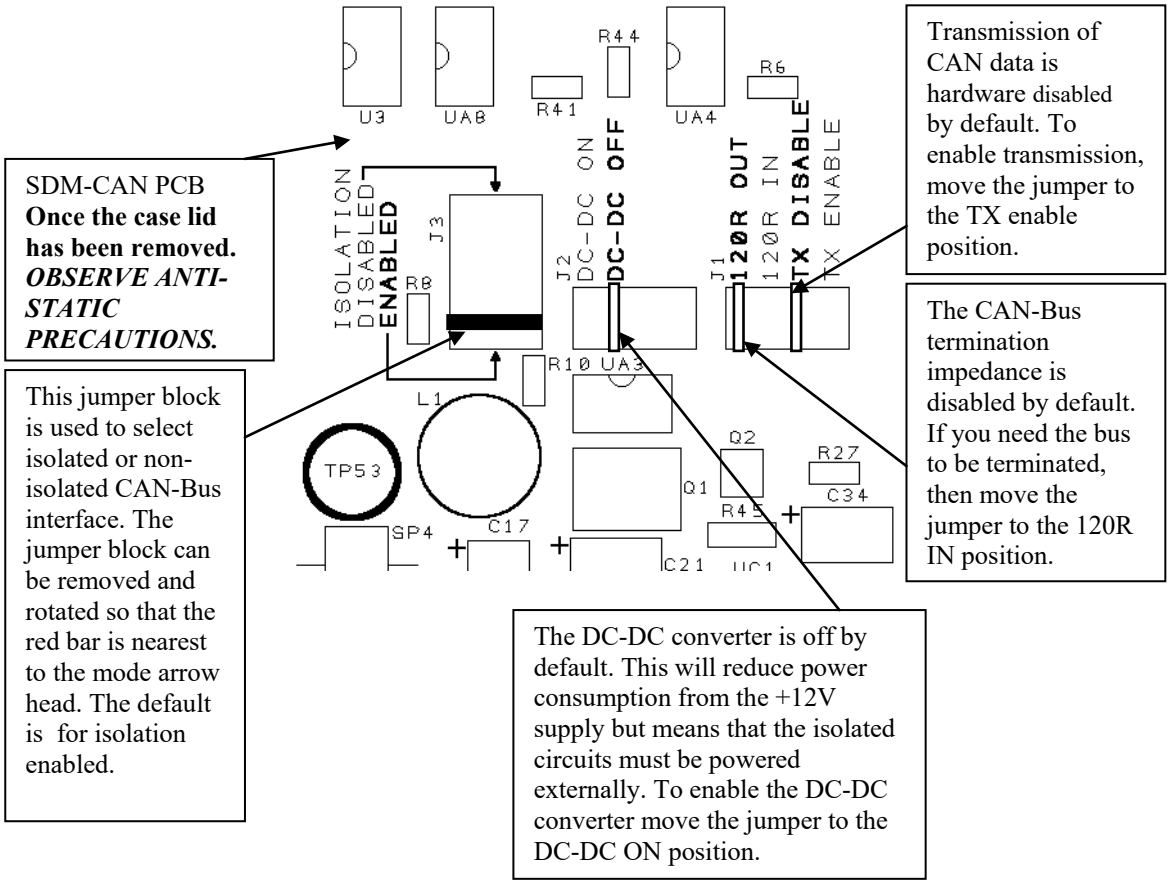


*FIGURE 2-1. SDM-CAN Internal Jumpers*

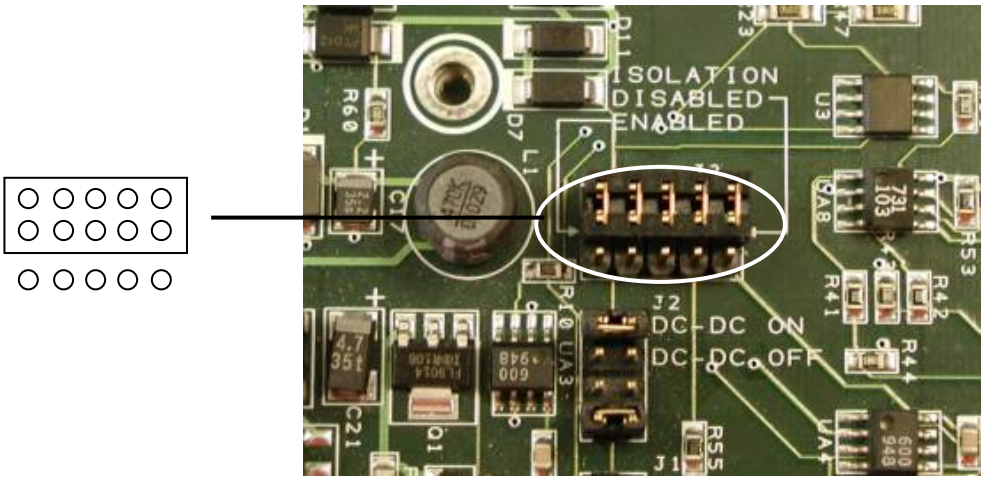


*FIGURE 2-2. SDM-CAN Isolation enabled (default)*

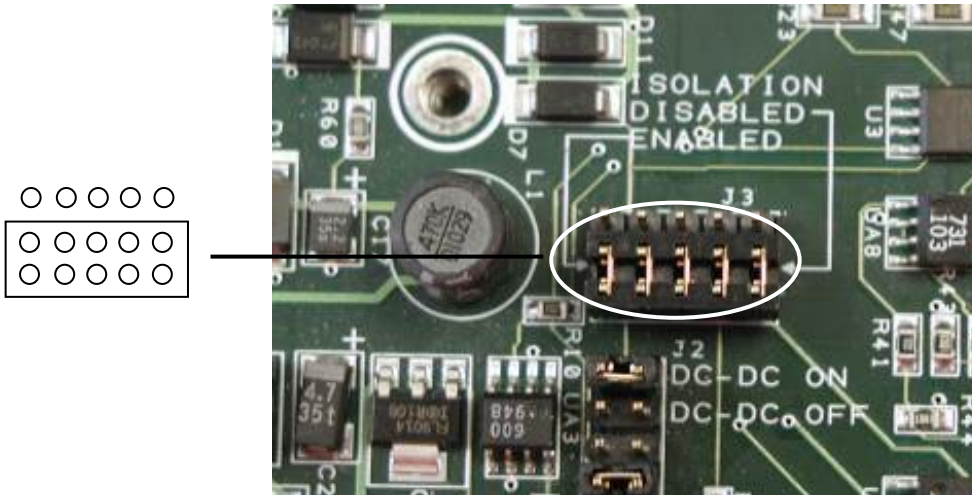


*FIGURE 2-3. SDM-CAN Isolation disabled*

## 2.3 Connection to the Datalogger and Power Supply

To allow communication between the SDM-CAN and a datalogger, firstly connect it to the datalogger's SDM port, and then connect to a 12V power supply. Both the datalogger and the SDM-CAN 12V power supply must share a common ground.

The SDM port is provided in different ways on different dataloggers:

**CR10X and CR23X** – use the C1, C2 and C3 control ports.

**CR7** – a special SDM terminal block is provided as part of the SDM upgrade kit. This terminal block is fitted on a small module adjacent to the 9 way 'Serial I/O' connector on the front of the 700 control module. The connections are labeled C1, C2 and C3.

**CR5000** – use the port connections labeled SDM-C1, SDM-C2 and SDM-C3.

**CR9000** – connections are made via the 9 way, 'CSI Serial I/O' connector on the 9080 PAM card. Pins 6, 7 and 8 are used as C3, C2 and C1 respectively. Pin 2 is ground. Campbell Scientific offers connection modules for this port which allow access to the SDM function as well as retaining normal function of the serial port, please contact your local sales office for further details.

The SDM-CAN requires a nominal 12V power supply connection (7-26V) rated at 150mA. Normally the datalogger supply can be used for this feed. A connection to ground is also required. If the 12V supply is separate from the datalogger, both the ground of the supply and datalogger must be connected together.

The SDM and power connections are made to a black terminal block on the left-hand side of the SDM-CAN interface. This terminal block has special spring loaded terminals which are simple to use and highly resistant to loosening in high vibration environments. To open the terminal simply insert

the tip of a small flat blade screw driver (3mm width) into the rectangular hole above the circular terminal hole. Push in the blade of the screwdriver until the spring is released and the terminal opens. Insert the pre-stripped wire and then remove the screwdriver. See FIGURE 2-4. If space is limited, as when the unit is mounted in an enclosure etc., the screwdriver can be inserted into the front of the terminal block to push open the spring, as shown in FIGURE 2-5.

*FIGURE 2-4. Using the Spring Loaded Terminal Blocks (Top Option)*

*FIGURE 2-5. Using the Spring Loaded Terminal Blocks (Front Option)*

Where you need to install more than one wire in a single terminal connector, use only stranded wires and twist the wires together before inserting them in the terminal. This type of terminal is not suitable for use with multiple solid core wires unless the wires are joined externally, e.g. using a ferrule.

Route the wires from the SDM-CAN interface to the datalogger connections using the shortest route. Avoid running them near cables which could cause noise pickup. In noisy environments use low capacitance signal cable with an overall foil screen, connecting the screen to the datalogger power ground.

Where multiple SDM devices are in use connect them in parallel to datalogger SDM ports, making sure each device has a unique SDM address. Ensure that the maximum cable length between the datalogger and the SDM-CAN does not exceed 3 meters.

An additional I/O terminal is provided on the SDM-CAN for use with dataloggers which support interrupt driven logging events. This might typically be used to enable the rapid capture of time critical CAN data, where the I/O port can be used to indicate to the datalogger that data has been captured and is available for immediate collection (see below). In most applications this function will not be used and the terminal need not be connected. Where it is required, it should be connected to a digital input on the datalogger.

### 2.3.1 LED Status Indication

When power is applied to the SDM-CAN the red 'STATUS' LED will flash to indicate the current status of the unit as a result of the power-up checks.

If the LED flashes once, the module has passed all power-up tests and should operate correctly. The other flash sequences are shown below. Problems with the operating system can normally be fixed by reloading the operating system.

Please contact Campbell Scientific if you are unable to resolve the problem.

**TABLE 2-2. LED Status Indication**

| Number of flashes | Indication |
|---|---|
| 1 | SDM-CAN is ok. |
| 2 | OS signature bad. |
| 10 | OS downloaded has failed. |

## 2.4 Connection to CAN-Bus.

The physical connection to the CAN-Bus is achieved by one of two methods which is by either the 3 way un-pluggable screw terminals or the 9 pin 'D' plug which conforms to CIA draft standard 102 version 2.

The basic connections of the CAN-Bus to the three-way terminal are CAN High, CAN Low and 0V ground reference. The 3 way screw terminal is marked as 'G H L' on the SDM-CAN case, where **G**=Ground, **H**=CAN High, **L**=CAN Low.

The CIA, 9 pin, 'D' connector pin configuration is shown in TABLE 2-3.

| TABLE 2-3. CIA CAN Connector Pin Connections | |
|---|---|
| **Pin** | **Function** |
| 1 | Reserved, NOT INTERNALLY CONNECTED. |
| 2 | CAN Low. |
| 3 | CAN Ground. |
| 4 | Reserved, NOT INTERNALLY CONNECTED. |
| 5 | CAN Shield. |
| 6 | CAN Ground. |
| 7 | CAN High. |
| 8 | Reserved, NOT INTERNALLY CONNECTED. |
| 9 | CAN +5volts. Input or output (see text). |

If the SDM-CAN hardware is configured (in either isolated or non-isolated mode) with the DC-DC converter ON, then Pin 9 of the 9 pin 'D' connector will provide +5V +/-10% at up to 40mA to any external device. If isolation is enabled and the DC-DC converter is set to OFF then this pin acts as an input for an external power supply capable of providing +5volts +/-10% at up to 100mA to provide power to the isolated circuitry of the SDM-CAN.

**NOTE**

The 3-way terminal block and CIA connector are connected in parallel internally and are *not* two separate connections to different CAN interfaces.

Please refer to the documentation for your CAN network to check the preferred method of connection. For many applications various standards will apply giving recommended practices for connection. Apart from the choice of connector some standards recommend different ways of 'tapping' into CAN networks and also recommend maximum lengths for 'T's or 'stubs' off the network. For instance, at the highest baud rate of 1Mbit/s, ISO11898 recommends a maximum bus length of 40 m and a maximum stub length of 0.3 m. These lengths increase significantly at lower bit rates.

As discussed above you also need to consider:

- If the SDM-CAN should terminate the network
- If it should be configured in isolated mode
- If transmission should be enabled
- The source of power for the isolation hardware.

# 3. Programming CR10X, CR7 and CR23X Dataloggers to use the SDM-CAN

This section describes the programming methods used for the above dataloggers to configure and use the SDM-CAN Interface. This section also covers general principles and techniques which are relevant to the other dataloggers.

## 3.1 General Principles

The SDM-CAN interface is controlled by instructions that the user enters in the datalogger program. For the dataloggers covered by this section the Program Instruction is number P118. Full details of the instruction are given below. This sub-section has been written to introduce the parameters of Instruction P118 and how they allow you to control the different operations of the SDM-CAN.

The initial function is to configure the SDM-CAN interface when the datalogger program is compiled. At this stage, the datalogger analyses the P118 parameters used by the program and sends the relevant commands to the SDM-CAN to configure it to perform appropriate tasks.

The most common configuration task, at compile time, is to set up the SDM-CAN to instruct it to filter out only the data frames of interest from all data 'passing on the bus'.

The other configuration task done at this point is to specify the speed at which the CAN-Bus is to operate. It is important to ensure the parameters which define the speed are set correctly and all instructions have the same values entered for these parameters otherwise either no data will be received, or you risk corrupting data on the bus, if the SDM-CAN is enabled for transmission.

The next common function is to read data back from the SDM-CAN, to decode it, and to store it in input locations once the program is running. A single entry of P118 in the program can both configure the SDM-CAN during program compilation and also cause data to be read back from the SDM-CAN when that instruction is executed during normal program execution.

Similarly there is also a function which is used to send simple data from the datalogger input locations onto the CAN-Bus via the SDM-CAN. Again a single call of P118 can both configure and then transmit the data when the program is running.

A more complicated version of this function is also possible where multiple P118 instructions are used to build a transmit data frame within the SDM-CAN, made up of a series of fixed or variable data values from input locations. A subsequent P118 is used to instruct the SDM-CAN to transmit the frame either immediately or in a response to a remote frame request from another device.

Finally there are some special functions normally achieved by a single a call of P118. One such function is used to change internal 'switches' within the SDM-CAN which control its mode of operation, e.g. power mode, response to failed transmissions etc. Similar functions also allow you to read back the settings of these 'switches' into input locations and also to read and/or reset the number of

CAN errors detected and to also determine the general status of the SDM-CAN interface.

## 3.2 System Limitations

The SDM-CAN interface, in combination with a datalogger, has some limitations of which you need to be aware:

1) Memory Allocation and P118

   Firstly, as discussed above, when the datalogger compiles a program with P118 in it, it sends commands to the SDM-CAN instructing it what to do at run time. When it does this the SDM-CAN allocates some of its memory (a 'bin') for each call of P118 in the program. Appendix A, *Principles of Operation*, discusses the operation of these bins and other buffers in the SDM-CAN in more detail. However, most users only need to know that there is a limit of 128 bins in the SDM-CAN thus constraining the number of instances of P118 for any one SDM-CAN to 128.

   It is, of course, possible to have several SDM-CAN devices connected to the datalogger(s), each with separate SDM addresses, and each with up to 128 calls of P118.

2) Data Capture Limitations

   Another limitation is the capability of the overall speed at which the datalogger can pick up and transfer data values back to its memory. These limitations do not arise within the SDM-CAN interface itself, as it uses a high speed CAN interface along with a fast microprocessor. Data can therefore be captured off the CAN-Bus at close to the maximum bus loading at the maximum baud rate. However, the limitations arise from the datalogger itself, both in terms of its capability to call P118 often enough (especially when making other measurements) and also in its capability to transfer the data from the SDM-CAN back into its memory over the SDM communications port.

   The exact throughput possible is determined by a very complicated combination of variables, including the speed of the datalogger in question, the program it is running, how many SDM devices are in use and, to a lesser degree, other tasks it is running, e.g. communications activity.

   In practice, for fast data, it will not be practical to capture every single data packet. However, the SDM-CAN will be used to sample the last reading it received on the CAN-Bus before the datalogger requests data.

   If a new data value has not been captured from the CAN-Bus since the last value was transferred to the datalogger, the SDM-CAN can either be set to always return the previous value captured (default) or it can be configured (see the internal software switch settings below) to return the standard out of range value to the datalogger, i.e. –99999 if the value has already been read. This value will also be returned in the event of other errors including communication errors between the datalogger and SDM-CAN.

Data stored in packets on the CAN-Bus can be encoded in a number of different ways. The SDM-CAN itself can cater for many different types of data, but there are some limitations imposed by the way in which the data is stored in the datalogger. The prime limitation is that data read into the datalogger is first converted into a 4 byte floating point format which can only resolve, at most, 23 bits, or roughly 7 digits, of the decimal equivalent of any number stored. Furthermore, when data is stored to final storage, the resolution is truncated again to either 4 or 5 digits (with the exception of the CR5000/9000 dataloggers which also support storage in IEEE4 format).

To avoid over-running the datalogger's internal floating point resolution, the maximum length of integer that the SDM-CAN can send or receive is therefore limited to 16 bits. This limited resolution can cause problems when reading CAN data where data is encoded as 32 or 64 bit integers.

The simplest solution, in those cases, is to read the value as a series of 16 bit integers written to separate input locations in the datalogger. These can then either be combined once the data has been recovered to a computer or, if some of the resolution is not needed, the data values can be combined in the datalogger using its normal maths functions. You must bear in mind, however, the limitations of the 4-byte floating point calculations and the output resolution of the datalogger.

The CAN standard also allows some types of data to be spread across several data packets, where those data packets all have the same identifier. Such data normally would consist of fixed identifiers stored as ASCII data, which do not normally have to be logged. Reliably capturing such data with the SDM-CAN is not possible, with the current software, unless the sequential packets are transmitted relatively slowly. Please contact Campbell Scientific for further information if you have a requirement to do this.

3) When transmitting CAN frames from the SDM-CAN there are situations where some frames are not transmitted. This is because the SDM-CAN has a two layer buffer for transmitted frames. This allows a frame to be transmitted whilst a new frame is being built. However if your program tries to send frames too quickly, before earlier frames are sent, the frames will be overwritten and lost.

   This scenario generally does not happen with CR10X / CR23X loggers as they are not fast enough. But with the CR5000 / CR9000 loggers it is possible to overrun the double buffer especially in pipe line mode if you are transmitting more than 2 frames per scan. It is recommended to use sequential mode in this case as it allows a delay between CAN-BUS instructions.

## 3.3 The Datalogger Instruction

The instruction used by all of the dataloggers covered in this chapter is Instruction 118. The structure of the instruction and parameter types is shown below. This structure is given in the same format that normal instructions are shown in the datalogger manuals. Please refer to the datalogger manual for a

description of the data types, entry of the instruction and how to index ('--') parameters.

**NOTE** In some previous versions of datalogger operating systems, Instruction 118 was used for the now obsolete OBDII interface. Older datalogger manuals and Edlog help systems may still refer to this instruction. Please make sure you are using a version of the operating system that supports P118 and refer to a more recent datalogger manual or Edlog help system.

It will be apparent for some functions of P118 that some parameters are not relevant or have no function. In these cases simply leave the parameter(s) at their default value(s) which is normally zero.

### 3.3.1 Instruction 118: SDM-CAN

| PARAM. NUMBER | DATA TYPE | DESCRIPTION | RANGE |
|---|---|---|---|
| 01: | 2 | SDM address | 00..33 |
| 02: | 2 | TQUANTA | 0-63 |
| 03: | 2 | TSEG1 | 0-15 |
| 04: | 2 | TSEG2 | 0-7 |
| 05: | 4 | ID bits 0-10 | 0-2047 '--' Set 11bit ID. |
| 06: | 4 | ID bits 11-23 | 0-8191 |
| 07: | 2 | ID bits 24-28 | 0-31 |
| 08: | 2 | Data type | 0-33 |
| 09: | 2 | Start bit number | 0-64, '--' Left-hand referenced LSB. |
| 10: | 2 | Number of bits | 0-64, '--' Enable Interrupt mode. |
| 11: | 4 | Number of values | 0-99 |
| 12: | 4 | Input Location | |
| 13: | FP | Multiplier | |
| 14 | FP | Offset | |

### 3.3.2 SDM Address (Parameter 01:)

This parameter should match the SDM address set by the address switch on the side of the module to which this instruction applies. Please see Section 2.1, *Address Switch Configuration*, above, for more details. Also see the section below, regarding the special function of address 33.

### 3.3.3 TQUANTA, TSEG1, TSEG2 (Parameters 02:, 03:, 04:)

These parameters are used to set the bit rate and other timing parameters for the CAN-Bus network. On some networks the relationship between some of these parameters is predefined and just one parameter, the baud rate, is quoted. For maximum flexibility, though, the user is given access to all of the relevant parameters. TABLE 3-1 gives some typical values of the parameters for a

range of baud rates. However, be sure to check that these are correct for your specific network before using them.

The parameters are entered as integer numbers which define various times that control when the binary data is sampled by the CAN hardware. The following discussion and nomenclature is common to the set-up of most CAN controller chips. If you are not familiar with CAN at this level please seek the advice of someone who is familiar with your network to determine these parameters.

The overall speed of the network is specified by the baud rate, in bits per seconds, which define the time per bit ($t_{bit}$) by the simple relationship:

$t_{bit}$ = 1 / baudrate

Within the time period for each bit the CAN standards define three different time segments which ultimately control when the CAN hardware samples the signal.

This is often shown in a diagram, thus:

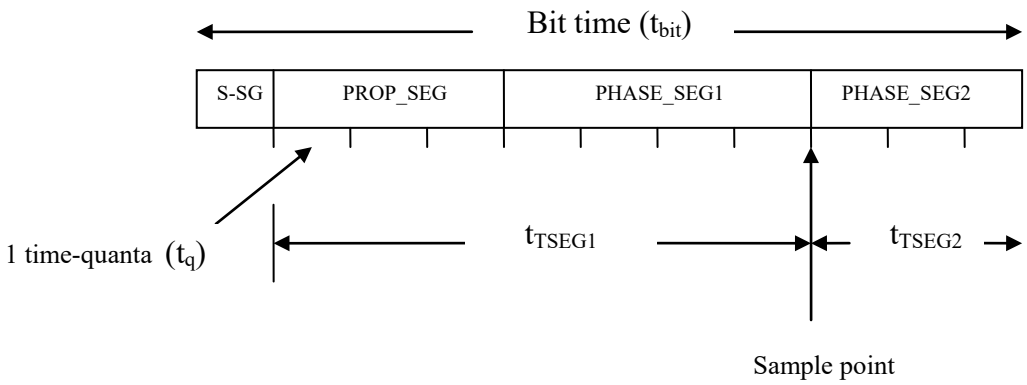


The bit time is divided into time-quanta ($t_q$), of which there are between 8-23 time- quantum in the bit time. The $t_q$ (in seconds) used by the SDM-CAN is set by the scaling factor TQUANTA (parameter 02). This is the parameter that largely determines the baud rate. To work out a suitable value of TQUANTA, knowing the required $t_q$, the following equation is used:

TQUANTA = $t_q * 8*10^6$

The first time segment is known as the synchronization segment (S-SG) and by convention is one time-quanta long.

This is followed by two segments known as the propagation segment and phase segment one. These are determined by the characteristics of the network and other devices on the network. The total of these two time segments determines the time

when the SDM-CAN samples the data bit and is known as $t_{TSEG1}$. The final segment is known as phase segment two or $t_{TSEG2}$

The relationship between these times is summarized by:

$t_{bit}=t_q+t_{TSEG1}+t_{TSEG2}$

$t_{TSEG1}$ (in seconds) is set using the scaling factor TSEG1 (parameter 03), the value of which is calculated using the following equation:

$TSEG1 = t_{TSEG1} / t_q$

$t_{TSEG2}$ is set using scaling factor TSEG2 (parameter 04) the value of which is calculated using:

$TSEG2 = t_{TSEG2} / t_q$

When determining the settings of these parameters it is important to ensure that the size and total number of $t_q$ exactly matches the baud rate at which the network is to run, as the tolerance allowable is normally quoted as +/-1.5%.

The relative settings of TSEG1 and TSEG2 are not so critical as they control when the hardware samples the data value and there is normally quite a wide tolerance over which this will work.

If no data other than the baud rate of a network is available a simple 'rule of thumb' is to set the parameters such that there are at least eight time-quanta in the span of the bit width and that the sample point is 80% through the bit width.

**TABLE 3-1. Typical settings of the CAN Speed Parameters**

| Baud rate | TQUANTA | TSEG1 | TSEG2 |
|---|---|---|---|
| 1M | 1 | 5 | 2 |
| 800 K | 1 | 7 | 2 |
| 500 K | 2 | 5 | 2 |
| 250 K | 4 | 5 | 2 |
| 125 K | 8 | 5 | 2 |
| 50 K | 16 | 7 | 2 |
| 20 K | 40 | 7 | 2 |

**NOTE** The same three values for these parameters should be used in every call of the P118 instruction in the datalogger program.

### 3.3.4 ID (Parameters 05:, 06:, 07:)

A CAN data frame includes an identifier (ID) which is used by devices on the network to identify each type of packet on the network. Some standards reserve certain IDs or ranges of IDs for specific functions. The J1939 SAE standard for instance reserves certain parts of the ID to identify the type of data, its priority and its origin (see Appendix C, *Application of the SDM-CAN on Networks Complying with the J1939 SAE Standards*, for a discussion of this standard and use with the SDM-CAN). The SDM-CAN is, however, transparent to any

special meaning of the ID; each packet is only referenced by the full ID. The CAN 2.0A standard uses an ID with 11 bits, while CAN 2.0B uses 29 bits.

When entering IDs into Instruction P118, three parameters are used. This is because the ID size, in number of bits, is too large to be encoded into a single parameter.

The first ID parameter (parameter 05) sets bits 0..10, entered as a number between 0 and 2047. This parameter also determines whether an 11-bit or a 29-bit Identifier is set. If you index this parameter then an 11bit Identifier is set; the following two parameters are then irrelevant and are normally left at zero.

The second ID parameter (parameter 06) encodes bits 11..23 entered as 0 to 8191. The third ID parameter (parameter 07) is for bits 24 to 28 entered as 0 to 31.

**NOTE** CAN networks either work with 11 or 29 bit IDs. As a general rule you cannot have packets with different length IDs on the same network. Therefore make sure parameter 05 specifies the same length ID for all calls of P118.

### 3.3.5 Data Type (Parameter 08:)

This parameter determines the type of data involved and/or the type of function this call of P118 will perform. The data type parameter is entered as a two-digit parameter in the range of 0-33. A summary table of the data types described below is given in Appendix B, *A Summary of Data Types*, of this manual for quick reference.

As a general rule, this function is applied only to data packets with the ID specified in parameters 05..07. The action applies to a certain number of bits within the data frame that is specified in parameter 10, starting at the bit specified in parameter 09. In some cases the number-of-bits parameter is overridden implicitly by the data type specified, e.g. IEEE4 data is always 32 bits in length. For integer values, the longest integer you read or send from one datalogger input location is 16 bits as a result of limitations in the datalogger. See Section 3.2, *System Limitations*, above for an explanation and work-arounds.

For data types that read or set status, switches or error codes, only the input location parameter, multiplier and offset are used. Other parameters can be set to zero.

As defined by the CAN standard, data is always encoded or decoded on the assumption that the least significant bit is transmitted last or is on the 'right-hand side' of a data frame. The data frame can be from 0 to 64 bits in length, but is normally a multiple of 8-bit bytes. This means there are typically 0-8 bytes in the data frame.

Please refer to Appendix D, *Examples of CAN Data Frames and Data Encoding and Decoding*, for examples of typical data frames and how to decode data within them. Appendix D, *Examples of CAN Data Frames and Data Encoding and Decoding*, also contains diagrams to show the method of pointing to the start bit within the data frame.

For convenience the start bit can be referenced from either end of the frame (see parameter 09 below), but this does not change the direction in which data is encoded or decoded. Within a byte the MSBit is always first (on the left).

Where the number-of-values parameter (parameter 11) is greater than one, the same function is applied to successive sections of the data frame, moving towards the 'left' of the frame. Data values are read to, or written from, successive input locations in the datalogger.

The data types can be grouped into different type of functions, as follows:

#### 3.3.5.1 Collect and retrieve a data value:

This function programs the SDM-CAN to capture a particular data packet and pass specific data from the data frame within that packet back to the datalogger.

| Parameter Value | Data Type |
|---|---|
| 1 | Unsigned integer, most significant byte 1st. |
| 2 | Unsigned integer, least significant byte 1st. |
| 3 | Signed integer, most significant byte 1st. |
| 4 | Signed integer, least significant byte 1st. |
| 5 | 4 byte IEEE floating point number, most significant byte 1st. |
| 6 | 4 byte IEEE floating point number, least significant byte 1st. |

#### 3.3.5.2 Build a data frame for transmission:

The data will be sent to the SDM-CAN where it is written into a working 8-byte buffer in memory. The data is written starting at the bit position determined by parameter 09 and the number of bits stored by parameter 10. When the data type parameter is set in the range of 7..12, the data is written to the buffer directly, i.e. it overwrites any previous data in that memory (see also types 13..18).

Once the buffer is complete, after using other P118s with this range of data types to construct the desired data frame, it is sent out onto the CAN-Bus by a further call of P118 with parameter 08 set to 25 or 26 (see below).

| Parameter Value | Data Type |
|---|---|
| 7 | Unsigned integer, most significant byte 1st. |
| 8 | Unsigned integer, least significant byte 1st. |
| 9 | Signed integer, most significant byte 1st. |
| 10 | Signed integer, least significant byte 1st. |
| 11 | 4 byte IEEE floating point number, most significant byte 1st. |
| 12 | 4 byte IEEE floating point number, least significant byte 1st. |

Setting parameter 08 in the range of 13..18 has the same function as in the7..12 range, except that the data values written are logically 'OR'ed with

values previously written into the memory buffer. This allows complex bit patterns to be defined, sometimes changing only as little as one bit at a time.

| Parameter Value | Data type |
|---|---|
| 13 | Unsigned integer, most significant byte 1st. |
| 14 | Unsigned integer, least significant byte 1st. |
| 15 | Signed integer, most significant byte 1st. |
| 16 | Signed integer, least significant byte 1st. |
| 17 | 4 byte IEEE floating point number, most significant byte 1st. |
| 18 | 4 byte IEEE floating point number, least significant byte 1st. |

#### *3.3.5.3 Transmit individual data values onto the CAN-Bus:*

This range of parameter values instructs the datalogger to send a data value to the SDM-CAN in the format specified; it is loaded into the specified point in a data frame and then immediately transmitted onto the CAN-Bus. Bits within the data frame that are not set are left at zero. The data frame length is set to the minimum size (in whole bytes) required to hold the type of data value specified.

| Parameter Value | Data Type |
|---|---|
| 19 | Unsigned integer, most significant byte 1st. |
| 20 | Unsigned integer, least significant byte 1st. |
| 21 | Signed integer, most significant byte 1st. |
| 22 | Signed integer, least significant byte 1st. |
| 23 | 4 byte IEEE floating point number, most significant byte 1st. |
| 24 | 4 byte IEEE floating point number, least significant byte 1st. |

#### *3.3.5.4 Transmit a previously built data frame on to the CAN-Bus (type 25):*

When parameter 08 is set to 25, P118 will cause the datalogger to tell the SDM-CAN to transmit a previously ‘built’ data frame which is stored in the memory buffer for this packet ID (see data types 7..18 above).

The length of the data frame transmitted is determined by parameter 10. If number of bits is less than a complete number of full bytes (1-8) then the number of bytes sent will be rounded up and all unused bits will be set to zero.

The data start bit position will normally be set to one so the data frame starts at the beginning of the memory buffer. However, you can enter a value greater than one to allow part of the buffer to be transmitted, which can simplify some binary masking operations.

The memory buffer is left unchanged after transmission.

#### 3.3.5.5 Set-up previously built data frame as a Remote Frame Response (type 26):

When parameter 08 is set to 26, P118 will configure the SDM-CAN to use a previously 'built' data frame as remote frame response for packets of the specified ID. The length and start positions are specified as for data type 25.

#### 3.3.5.6 Read error counters (type 27):

This will return 4 values, in successive input locations starting at the location set by parameter 12, which show certain errors the SDM-CAN has recorded. The errors are written in the following order: transmit, receive, overrun and watchdog counts. Each is a count from 0 to 255.

The transmit, receive and overrun counters are measures of the errors on the CAN-Bus network as defined by the CAN standards. If the transmit counter reaches 255 then the CAN device goes into a 'bus-off' state, where it effectively disconnects itself from the network.

If the SDM-CAN switches to the 'bus-off' state, any further reads of the error counters will show the transmit counter fixed at 127. The counters then need to be reset to enable further use of the SDM-CAN (see data type 28, below). If this situation occurs on a regular basis, firstly check the datalogger program (P118 parameters). If these are correct, check the structure and design of the network.

The watchdog counter only increments (and is automatically reset) when the SDM-CAN 'crashes' either due to an internal software error or a hardware fault. Please contact Campbell Scientific for further advice.

#### 3.3.5.7 Read and reset the error counters (type 28):

This functions in exactly the same way as type 27 except that after reading the error counters they are reset to zero. This will also re-enable the SDM-CAN interface to the CAN-Bus if it has automatically entered the 'bus-off' state.

When the counters are reset, the CAN controller chip enters a special state and waits until it sees a period equal to 11 successive bits of inactivity on the CAN-Bus before it returns to the normal 'on-line' state. Therefore this function should not be called too frequently otherwise data may be lost.

#### 3.3.5.8 Read status (type 29):

This data type instructs the datalogger to request the current status of the SDM-CAN and writes the results into a single, specified, input location. The status is encoded within that location in the format 'abcd' where each letter is a digit in the range 0 to 9 indicating a different type of status information.

| | | |
|---|---|---|
| Status 'a': | 0 | This digit is currently unused. |
| Status 'b': | 0 | This digit is currently unused. |
| Status 'c': | 0 | This digit is currently unused. |
| Status 'd': | 0 | Bus-On; the SDM-CAN is involved in bus activities. All of the error counters are less than 96. |

| | | |
|---|---|---|
| | 1 | Bus-On; the SDM-CAN is involved in bus activities. One of the error counters is equal to or greater than 96. |
| | 2 | Bus-Off; the SDM-CAN is not involved in bus activities. All of the error counters are less than 96. |
| | 3 | Bus-Off; the SDM-CAN is not involved in bus activities. One of the error counters is equal to or greater than 96. |

See data type 28 above for details of the error counters and how to reset them.

#### *3.3.5.9 Read the signature and version number of the SDM-CAN operating system (type 30):*

This will return the OS signature and the OS Version number in separate locations. If the SDM-CAN detects that the OS signature is bad then zero will be returned.

#### *3.3.5.10 Send Remote Frame Request (type 31):*

A special type of CAN frame, called 'remote frame request' is transmitted with the CAN ID specified.

#### *3.3.5.11 Set SDM-CAN internal software switches (type 32):*

This data type instructs the datalogger to change some internal software switch settings that control the way it works. The new switch settings are read from a specified input location. The settings are encoded within that location in the format of a four digit number. For explanation purposes the four digits are represented as 'abcd' where each letter is a digit in the range 0 to 9 which indicates a different type of switch setting.

Once set the switches remain set until changed by another call of P118 or on loading a different program. Therefore it is only necessary to call a P118 to set these switches once, after program compilation, or when a switch needs to be changed using a call of P118 within an IF..THEN program construct (see the program examples below).

| | | |
|---|---|---|
| Switch 'a': | 0 | This digit is currently unused; enter zero |
| Switch 'b': | 0 | SDM-CAN returns the last value captured from the network, even if read before **(Default)** |
| | 1 | SDM-CAN returns –99999 if a data value is requested by the datalogger and a new value has not been captured from the network, since the last request. |
| | 2-9 | Currently unused |
| Switch 'c': | 0 | Disable I/O Interrupts **(Default)** – see Section 3.4.1, *Interrupts Using the I/O Connection* |
| | 1 | Enable I/O Interrupts, pulsed mode |
| | 2 | Enable I/O Interrupts, fast mode |
| | 3-7 | Currently unused |

| | | |
|---|---|---|
| | 8 | Set low power standby mode. The SDM-CAN cannot wake from this state as a result of CAN-Bus activity. Setting this switch to any other value will bring the SDM-CAN out of standby. |
| | 9 | Leave this switch setting unchanged |
| Switch ‘d’: | 0 | Listen only mode, no CAN transmission or acknowledgement to a correctly received CAN frame is possible. The SDM-CAN runs in ‘Error Passive’ mode **(Default)**. |
| | 1 | One shot transmission, no re-transmission will occur in the event of loss of arbitration or error. Frames received correctly from an external node are acknowledged |
| | 2 | Self-reception. A frame transmitted from the SDM-CAN that was acknowledged by an external node will also be received by the SDM-CAN but no re-transmission will occur in the event of loss of arbitration or error. Frames received correctly from an external node are acknowledged |
| | 3 | Normal, re-transmission will occur in the event of loss of arbitration or error. Frames received correctly from an external node are acknowledged. This is the usual setting to use if the SDM-CAN is to be used to transmit data. |
| | 4 | One shot transmission and self test mode. The SDM-CAN will perform a successful transmission even if there is no acknowledgement from an external CAN node. Frames received correctly from an external node are acknowledged |
| | 5 | Self-reception and self test mode. The SDM-CAN will perform a successful transmission even if there is no acknowledgement from an external CAN node. Frames received correctly from an external node are acknowledged. The SDM-CAN will receive its own transmission |
| | 6 | Normal and self test mode. The SDM-CAN will perform a successful transmission even if there is no acknowledgement from an external CAN node. Frames received correctly from an external node are acknowledged. |
| | 7 | Similar to switch setting 'd-3' , but this setting is 'remembered' at power-up. During power-up, the SDM-CAN will acknowledge all valid messages.<br>NOTE: This setting relies on the datalogger having set up the SDM-CAN before use. |
| | 8 | Not defined |
| | 9 | Leave this switch setting unchanged |

**NOTE** Please refer to the CAN standards and your own network documentation for a more detailed explanation of the switch 'd' modes. It is important to choose the correct setting when the SDM-CAN is required to transmit data. Also remember to check the jumper settings inside the SDM-CAN if enabling transmission, as the default setting is for transmission to be disabled in hardware.

#### *3.3.5.12 Read SDM-CAN internal switches (type 33):*

This data type returns the internal switch settings, into a specified input location. The switch values shown are encoded in the same way as they are set (see type 34 above), with the exception that a switch setting of 9 is reserved to show an undefined error (please contact Campbell Scientific if such an error occurs).

### 3.3.6 Start Bit Number (Parameter 09:)

The start bit number is used to point to the least significant bit (LSB) of the data value within the CAN data frame to which this instruction relates. Within CAN data frames there is no general standard as to the order or format of the binary data. ISO11898 does specify that data should be sent with the most significant bit (MSB) first, least significant bit (LSB) last. Most diagrams show the MSB on the left and the LSB on the right. However, some users may find the start point for the data is referenced in the opposite fashion, i.e. as a count from the left side of the frame, and so the SDM-CAN supports both methods of referencing the start point.

By default the SDM-CAN follows the ISO standard and the LSB is referenced to the right-most bit of the frame. The bit number can range from 1 to 64 as there are up to 64 bits in a CAN frame. If the parameter is indexed, (marked '--') then the reference is changed to point to the LSB relative to the left-hand most bit of the frame. Please note, though, that choosing this option does not have any automatic affect on the type (direction) of encoding or decoding used – it only changes the method of pointing to the LSB.

**NOTE** When entering the start bit, you should always point to the position of the least significant bit of the data to be decoded/encoded. Please refer to Appendix D, *Examples of CAN Data Frames and Data Encoding and Decoding*, for diagrams and examples of typical data types.

### 3.3.7 Number of Bits (Parameter 10:)

This relates to the number of bits to use in this transaction. This number can range from 1 to 64 as there are up to 64 bits in a CAN frame. If this parameter is indexed ('--') then, when a new value is received, the SDM-CAN, relevant to this particular call of Instruction P118, will pulse the I/O port to indicate to the datalogger that the data has been captured and can be read (see below).

**NOTE** For some data types this parameter will be overridden by a fixed number of bits required by the data type; even so the interrupt setting can still be set. For integer values, the longest integer you can read or send from one datalogger input location is 16 bits as a result of limitations within the datalogger (see Section 3.2, *System Limitations*, above for an explanation and work-arounds.

### 3.3.8 Number of Values (Parameter 11:)

This is the number of values that will be transferred to or from the datalogger in one operation. For each value transferred, the number of bits (parameter 10*)* will be added to the start bit number (parameter 9*)* when the start point is referenced to the right-hand side of the data frame. If referenced to the left-hand side, then the number of bits is subtracted from the current bit position. The consequence of this is that successive values are always from right to left in the frame.

### 3.3.9 Location (Parameter 12:)

This is the start input location where data will be read from or stored to. For any remaining values/repetition, each value will be read from, or stored into, the next incremental location.

### 3.3.10 Multiplier (Parameter 13:)

The data written to, or read from, an input location is multiplied by this parameter.

### 3.3.11 Offset (Parameter 14:)

The data written to, or read from, an input location has this offset parameter added to it.

## 3.4 Advanced Programming Techniques

### 3.4.1 Interrupts Using the I/O Connection

The I/O port can be used to signal to a datalogger that specific data has been captured, by the SDM-CAN, from the CAN network and is available for collection by the datalogger.

The main application for this is where CAN data needs to be captured at a much faster rate than the normal scan interval of the datalogger and the requirement is to capture as many CAN packets as possible. In this case the interrupt facility can be used to give capture of the CAN data as a higher priority over the normal scheduled measurement tasks, allowing the data to be captured at the highest rate possible.

The interrupt facility can also help solve the conceptual problem of capturing data into the datalogger from another system (one of the other devices on the CAN-Bus) which is running on a different asynchronous clock from the datalogger itself. This problem needs some consideration in all applications

except those where the datalogger can be made the master (i.e. where it requests data from the remote devices when its needs the data).

In other applications one has to cater for the possibility that data might not be available from the CAN network when the datalogger clock causes the datalogger to run its program. This can happen even when the CAN data is being transmitted at the same rate as the datalogger is running, simply because the two system clocks drift relative to each other. The interrupt facility allows you to ensure that data can be captured at the highest possible rate, but you still have to use special programming and/or data analysis techniques to synchronize the data with other measurements. The main problem is that the interrupt function might run more time stamps to the faster measurements in order to allow normal data analysis.

To enable the interrupt facility on the SDM-CAN you need to index (--) the program on the number-of-bits parameter (10) of the particular P118 instruction that you want to cause the interrupt when data is received. The following rules apply:

- The interrupt function only applies to data types which read data from the CAN-Bus.
- You can mark more than one P118 instruction to generate an interrupt, but you will then need to read data from all the possible data types which are indexed, as one or more may contain a new value and all new data must be read before the interrupt is cleared.
- With the CR10X and CR23X dataloggers you should ensure that all of the P118 instructions which are marked to cause an interrupt are in the same interrupt subroutine, normally number 98. Other dataloggers do not currently support the interrupt subroutine mechanism, but can be used in a similar mode by polling the digital input connected to the SDM-CAN I/O port, and only actually reading the data when the port is high.

As well as indexing parameter 10 of the instructions, you also have to enable the interrupt function by changing an internal software ‘switch’ in the SDM-CAN. This is done by calling P118 with data type 32, and setting digit ‘c’ to 1 or 2. (See above).

A switch value of 1 causes the interrupt function to operate in the following way:

a) *With no Interrupt pending* the I/O port is pulled low with 100Kohms.

b) *With an interrupt pending*, i.e. data has been captured, the SDM-CAN will first check that no other device is holding the port high and then pulse high for 50 milliseconds. If the I/O terminal is held at +5V by another peripheral it will wait until the I/O terminal goes low and has been low for 50 milliseconds before trying to drive it high to +5V again. The I/O line has a drive impedance of 1Kohms.

This method of driving the I/O line allows multiple SDM-CANs and other CSL products that support the I/O line to be wired in parallel. One consequence of the above technique, though, is that there will be a gap of up to 50 milliseconds

following the end of one interrupt before the SDM-CAN will raise the port for another interrupt. This could be a limitation in high speed data capture applications, hence the need for switch 2.

When switch 2 is set, the SDM-CAN responds immediately to data receipt and raises the port as soon as data has been received, filtered and processed. The SDM-CAN will only lower the line again permanently when the datalogger reads the data out of the SDM-CAN that caused the interrupt. To prevent problems with some events which might cause the datalogger to miss interrupts, the SDM-CAN will pulse the I/O port low for 1 ms after 50 ms, take the line high and then repeat this cycle until all the relevant data has been read. Using this switch setting will provide the quickest way of capturing data but may not work with other devices sharing the datalogger interrupt port.

**NOTE** To ensure proper configuration of the SDM-CAN by the datalogger for interrupt driven applications, it will pulse its I/O port on and off at 50ms intervals for 6 seconds after power-up or program recompilation.

### 3.4.2 Group Trigger

The group trigger function provides a mechanism to synchronize the data capture by one or more SDM-CAN (and some other SDM devices too).

This mode is enabled when an SDM-Group Trigger (P110) instruction is encountered. When this instruction runs, it broadcasts a special SDM message which causes all the SDM-CAN devices to copy the last data values captured from the CAN-bus into the working data buffers, and no further updates are allowed until P110 runs again (normally at the next execution of the program table). P118 instructions will read the locked values which are all sampled at once.

This SDM-Group trigger command is normally positioned at the beginning of the program table to lock all data samples exactly to the start of the scan interval. It should be remembered, however, that in the case of the SDM-CAN it will simply lock these values to the last values captured which could already have been transmitted some time earlier.

The SDM-Group trigger instruction actually broadcasts its message to SDM address $33_4$ (base 4), which prevents this address being available if the SDM-Group trigger command is to be used. This effectively reduces the number of SDM peripherals that support global trigger to 15 units.

### 3.4.3 Frame buffers with filtering and triggering

Operating systems V3 include the ability for the user data logger program to attach a buffer of 256 frames to any receiving CAN ID up to a limit of 25 different ID's.

**NOTE** If the user program tries to allocate more than 25 buffers then the additional buffer allocations will be ignored.

Each buffer can be configured as a standard ring buffer with no trigger or filter associated with it. The buffer can also be set to start to capture data when a predefined trigger pattern is encountered within the CAN data, or it can filter and buffer only the CAN frames that have some part of the data that fits a pattern.

To configure a filter or trigger two masks are used. The first is user defined as a 64 bit include AND mask applied to the CAN data of the CAN ID of interest. A second 64 bit user defined pattern is compared with the CAN data and when it matches the results of the previous `AND' operation the buffer will either trigger or filter CAN data of a specific ID until the buffer is full.

The buffer is a fill and stop ring buffer so if the buffer is full no more data will be stored until the logger reads a frame and makes room for another frame to be stored. With no mask and pattern bits set in trigger mode the buffer will trigger on any frame and behave as a normal ring buffer. This is useful for collecting fast back to back bursts of packets as the logger can collect them later in the knowledge the SDM-CAN will have captured up to 256 packets and stored them in its buffer.

#### 3.4.3.1 Setup of Mask and Filter / trigger

To implement this buffer function the build data frame Data type (7) is used as follows:

a) If “start bit number” (parameter 9) is NON-zero then data type 7 will build a data frame as normal.

b) If (parameter 9) is zero, the number of bits (parameter 10) is set to 8 with index (--) NOT SET and number of bytes (parameter 11) is set to 16 then an `Include mask' and `Filter mask' can be set at run time. The first 8 bytes are the Include mask mapped directly as a 64 bit frame with the first byte as the right most byte of the data frame. The second 8 bytes is the Filter mask mapped directly as a 64 bit frame with the first byte as the right most byte of the data frame. This instruction will also flush the buffer. This is used to create the buffer and attach it to a particular ID.

c) If (parameter 9) is zero, the number of bits (parameter 10) is set to 8 with the index (--) SET and number of bytes (parameter 11) is set to 16 then an `Include mask' and `Trigger mask' can be set at run time. The first 8 bytes are the Include mask mapped directly as a 64 bit frame with the first byte as the right most byte of the data frame. The second 8 bytes is the Trigger mask mapped directly as a 64 bit frame with the first byte as the right most byte of the data frame. This instruction will also flush the buffer and reset ready for trigger. This is used to create the buffer and attach it to a particular ID.

#### 3.4.3.2 Reading / Polling Buffer

To implement this buffer function the read switch Data type (33) is used as follows:

a) If “start bit number” (parameter 9) is zero then data type 33 will read the internal switches as normal.

b) If (parameter 9) is one, the number of bits (parameter 10) is set to 8 with the index (--) NOT SET and number of bytes (parameter 11) is set to zero then one CAN frame will be transferred from the buffer to the working buffer ready for normal data collection using Data Types 1-6. Also the number of CAN frames stored in the buffer will be stored in a logger location specified by this instruction.

c) If (parameter 9) is one, number of bits (parameter 10) is set to 8 with the index (--) SET and number of bytes (parameter 11) is set to zero then only the number of CAN frames stored in the buffer will be stored in a logger location specified by this instruction. This instruction would generally be used for polling the buffer.

#### *3.4.3.3 Basic Sequence of Buffer Usage:*

1. Initialize buffer and trigger event or filter using an SDM-CAN instruction with data type 7.

2. Wait long enough or poll the buffer until enough CAN frames are collected using an SDM-CAN instruction with data type 33.

3. Transfer a CAN frame from the buffer to the working buffer using an SDN-CAN instruction with data type 33.

4. Parse the CAN data frame using the normal SDM-CAN data types 1-6.

5. Repeat from (3) until you have collected and parsed all the CAN frames you require from the buffer.

6. Do other processing ……..

7. Repeat from (1) to collect another set of CAN frames.

## 3.5 Program Examples

Examples of specific instructions which decode/encode CAN data are shown in Appendix C, *Application of the SDM-CAN on Networks Complying with the J1939 SAE Standards*. This section gives some general examples of program constructs which show the general principles of operation.

### 3.5.1 Reading CAN Data

The following example reads a 16 bit engine speed value from a CAN network running at 250K baud.

```
;{CR23X}
;
*Table 1 Program
  01:  1.0       Execution Interval (seconds)

;Retrieve Data from CAN network
```

```
1:  SDM-CAN (P118)
  1:   0         SDM Address
  2:   4         Time Quanta
  3:   5         Tseg1
  4:   2         Tseg2
  5:   1024      ID Bits 0..10 (-- for 11-bit CAN ID)
  6:   7680      ID Bits 11..23
  7:   12        ID Bits 24..28
  8:   2         Rx, unsigned int, LSB 1st
  9:   33        Start Bit No.
  10:  16        No. of Bits
  11:  1         No. of Values
  12:  1         Loc [ Eng_Spd   ]
  13:  0.125     Mult
  14:  0.0       Offset

*Table 2 Program
  02:  0.0000    Execution Interval (seconds)

*Table 3 Subroutines

End Program
```

**NOTE** The above example uses the J1939 standard to define the ID parameter and value position in the data frame. Please refer to Appendix C, *Application of the SDM-CAN on Networks Complying with the J1939 SAE Standards*, for an explanation of the application of the SDM-CAN interface to networks complying to the J1939 standard.

### 3.5.2 Simple CAN Data Transmission

The following example transmits a 16 bit temperature value to a CAN network running at 500K baud.

```
;{CR10X}
;
*Table 1 Program
  01:  1         Execution Interval (seconds)

;When Flag 1 is high set SDM-CAN switches to transmit mode

1:  If Flag/Port (P91)
  1:   11        Do if Flag 1 is High
  2:   30        Then Do

;Load input location with value for switches

    6:  Z=F (P30)
       1: 0003       F
       2: 0          Exponent of 10
       3: 3          Z Loc [ Switches  ]
```

```
;Send switch settings to SDM-CAN

    7:  SDM-CAN (P118)
       1: 0          SDM Address
       2: 2          Time Quanta
       3: 5          Tseg1
       4: 2          Tseg2
       5: 1          ID Bits 0..10
       6: 0          ID Bits 11..23
       7: 0          ID Bits 24..28
       8: 32         Set switches
       9: 00         Start Bit No.
       10:       00                        No. of Bits
       11:       00                        No. of Values
       12:        3                        Loc [ Switches  ]
       13:        1.0                            Mult
       14:        0.0                            Offset

;Set flag 1 low after sending switch settings
    8:  Do (P86)
       1: 21         Set Flag 1 Low

    9:  End (P95)

    10:  Batt Voltage (P10)
       1: 4          Loc [ Battery   ]

    11:  Internal Temperature (P17)
       1: 5          Loc [ Int_Temp  ]

    12:  Thermocouple Temp (DIFF) (P14)
       1: 6          Reps
       2: 1          2.5 mV Slow Range
       3: 1          DIFF Channel
       4: 1          Type T (Copper-Constantan)
       5: 5          Ref Temp (Deg. C) Loc [ Int_Temp  ]
       6: 6          Loc [ TC_1      ]
       7: 1.0        Mult
       8: 0.0        Offset

;Transmit Data on to CAN network

13:  SDM-CAN (P118)
  1:   0         SDM Address
  2:   2         Time Quanta
  3:   5         Tseg1
  4:   2         Tseg2
  5:   1         ID Bits 0..10
  6:   0         ID Bits 11..23
  7:   0         ID Bits 24..28
  8:   20        Tx, unsigned int, LSB 1st
  9:   1         Start Bit No.
  10:  16        No. of Bits
  11:  1         No. of Values
  12:  6         Loc [ TC_1      ]
  13:  1.0       Mult
  14:  0.0       Offset

*Table 2 Program
  02:  0.0000    Execution Interval (seconds)

*Table 3 Subroutines

End Program
```

**NOTE** The default setting for the SDM-CAN internal software switches is 0. The switches must be set by using the data type 32 parameter to enable data transmission. Also remember to check the jumper settings inside the SDM-CAN if enabling transmission, as the default setting is for transmission to be disabled in hardware.

### 3.5.3 Building and Sending Data Frames

The following table shows the parameters used for the process of using a series of P118s to build a dataframe and then use a further call with data type set to 26 to define part of the working buffer as a remote frame response:

| **Input Loc Value** | | **Data type** | **Start Bit** | | **nbits** | | |
|---|---|---|---|---|---|---|---|
| Dec | Hex | | | Indexed | | | 64 bit Frame |
| | | | | | | Un-initialized frame>> | 0x12abcdef12345678 |
| 170 | 0xaa | 7 | 5 | N | 8 | Loaded into frame>> | 0x0000000000000aa0 |
| 1234 | 0x4d2 | 13 | 17 | N | 16 | Ored into frame>> | 0x0000000004d20aa0 |
| 65535 | 0xffff | 13 | 31 | N | 7 | Ored into frame>> | 0x0000001fc4d20aa0 |
| 171 | 0xab | 13 | 8 | Y | 8 | Ored into frame>> | 0xab00001fc4d20aa0 |
| X | X | 26 | 28 | Y | 32 | Remote Response Frame>> | 0x0ab00001 32 bit frame |

### 3.5.4 Using the Interrupt Function

By indexing ('--') the No. of bits parameter, when a new value that an instruction refers to is received the SDM-CAN I/O interrupt is enabled. This can be used to set a control port high and run an interrupt subroutine. An example of using the interrupt function is shown below.

```
;{CR23X}
;
*Table 1 Program
  01:  1         Execution Interval (seconds)

;Set flag 1 high to set SDM-CAN internal software switches
1:  If Flag/Port (P91)
  1:   11        Do if Flag 1 is High
  2:   30        Then Do

;Load input location with value for switches
    2:  Z=F (P30)
       1: 10         F
       2: 0          Exponent of 10
       3: 3          Z Loc [ Switches  ]
```

```
;Send switch settings to SDM-CAN
    3:  SDM-CAN (P118)
       1: 0          SDM Address
       2: 2          Time Quanta
       3: 5          Tseg1
       4: 2          Tseg2
       5: 1          ID Bits 0..10
       6: 0          ID Bits 11..23
       7: 0          ID Bits 24..28
       8: 32         Set switches
       9: 00         Start Bit No.
       10:       00                        No. of Bits
       11:       00                        No. of Values
       12:        3                        Loc [ Switches  ]
       13:        1.0                            Mult
       14:        0.0                            Offset

;Set flag 1 low after sending switch settings
    4:  Do (P86)
       1: 21         Set Flag 1 Low

5:  End (P95)

*Table 2 Program
  02:  0.0000    Execution Interval (seconds)

*Table 3 Subroutines

;Interrupt subroutine 98, when C8 goes high run this subroutine
1:  Beginning of Subroutine (P85)
  1:   98        Subroutine 98

;Read CAN value
    2:  SDM-CAN (P118)
       1: 00         SDM Address
       2: 2          Time Quanta
       3: 5          Tseg1
       4: 2          Tseg2
       5: 1          ID Bits 0..10 (-- for 11-bit CAN ID)
       6: 0          ID Bits 11..23
       7: 0          ID Bits 24..28
       8: 1          Rx, unsigned int, MSB 1st
       9: 1          Start Bit No.
       10:       16                        --    No. of Bits
       11:        1                        No. of Values
       12:       10                        Loc [ RxTC_1    ]
       13:        1.0                            Mult
       14:        0.0                             Offset

;end of interrupt subroutine
3:  End (P95)

End Program
```

### 3.5.5 Using the Group Trigger

The SDM-Group Trigger controls SDM devices that support the Group Trigger protocol, including the SDM-CAN. All Group Trigger devices are triggered to make simultaneous measurements, the data is then retrieved by using the appropriate instruction.

For the SDM-CAN, this instruction is can be used in a vehicle where more than one CANbus network is present. An example of using the group trigger is shown below.

```
;{CR23X}
;
*Table 1 Program
  01:  1          Execution Interval (seconds)

;Initiate Group Trigger
1:  SDM-Group Trigger (P110)

;Retrieve Data from CAN network A
2:  SDM-CAN (P118)
  1:   00         SDM Address
  2:   4          Time Quanta
  3:   5          Tseg1
  4:   2          Tseg2
  5:   204        ID Bits 0..10 (-- for 11-bit CAN ID)
  6:   81 1       ID Bits 11..23
  7:   7          ID Bits 24..28
  8:   23         Tx, real IEEE4, MSB 1st
  9:   1          Start Bit No.
  10:  32         No. of Bits
  11:  1          No. of Values
  12:  1          Loc [ AC_Comp_1 ]
  13:  1.0        Mult
  14:  0.0        Offset

;Retrieve Data from CAN network B
3:  SDM-CAN (P118)
  1:   01         SDM Address
  2:   4          Time Quanta
  3:   5          Tseg1
  4:   2          Tseg2
  5:   1024       ID Bits 0..10 (-- for 11-bit CAN ID)
  6:   7680       ID Bits 11..23
  7:   12         ID Bits 24..28
  8:   2          Rx, unsigned int, LSB 1st
  9:   33         Start Bit No.
  10:  16         No. of Bits
  11:  1          No. of Values
  12:  2          Loc [ Eng_1     ]
  13:  0.125      Mult
  14:  0.0        Offset

;Retrieve Data from CAN network B
8:  SDM-CAN (P118)
  1:   01         SDM Address
  2:   4          Time Quanta
  3:   5          Tseg1
  4:   2          Tseg2
  5:   768        ID Bits 0..10 (-- for 11-bit CAN ID)
  6:   7680       ID Bits 11..23
  7:   12         ID Bits 24..28
  8:   1          Rx, unsigned int, MSB 1st
  9:   49         Start Bit No.
  10:  8          No. of Bits
  11:  1          No. of Values
  12:  3          Loc [ Throttl_1 ]
  13:  0.125      Mult
  14:  0.0        Offset

*Table 2 Program
  02:  0.0000     Execution Interval (seconds)

*Table 3 Subroutines

End Program
```

# 4. Programming CRBasic Dataloggers to use the SDM-CAN

This chapter describes how to program the CR5000/CR9000X and older CR9000 dataloggers, using CRBASIC language, to control the SDM-CAN interface. Similar principles can be followed for newer CRX000 dataloggers that include the SDM-CAN instruction in their operating system.

## 4.1 General Principles

Some newer dataloggers use the CRBASIC programming language. CRBASIC incorporates an instruction which is virtually identical to P118, described in Section 3, *Programming CR10X, CR7 and CR23X Dataloggers to use the SDM-CAN*. To avoid duplication this section of the manual simply references the relevant paragraphs in that section. For this reason you are advised to read section three in its entirety to gain a full understanding of all the general principles and parameter settings.

Currently neither the CR5000, CR9000X nor CR9000 support interrupt driven events as described above. However, with the extra speed of these dataloggers, a similar function can be achieved by polling a digital input and only executing the instructions required when the port is high. The consequences of doing this in either the slow or fast tables needs to be considered, especially when trying to synchronize this data with analogue measurements.

### 4.1.1 High Speed Block Mode

Operating system Version 3 supports a new high speed block mode for SDM communication that allows much faster data transfers to the logger. This was implemented for the CR9000 and CR5000 to allow users to run a program at more than 200Hz with the SDM-CAN. It gives a 5 fold improvement in performance over normal mode. Block mode operation is activated by using data types 65 to 70; these are the block mode equivalents of data type's 1 to 6. When block mode is active then all CAN data is collected at the beginning of the scan in parallel with analogue measurements. There are a number of restrictions when using block mode. There is a limit of 128 values that can be read in total. Other restrictions are logger specific. On a CR9000 - firstly you can only have one differently addressed SDM-CAN in each scan unless all other differently addressed SDM-CAN's are using normal mode data types 1 to 6. Secondly you cannot use conditional statements with SDM-CAN instructions which are enabled for block mode. Restrictions for use with the CR9000X/CR5000 are that you must keep all block mode instructions together and not intermix normal mode instructions within the group of block mode instructions. You can however put normal mode instructions in front or after the group of block mode instructions. You cannot use conditional statements on either normal or block mode SDM-CAN instructions.

Time to execute block mode for a CR9000 in milliseconds with maximum bus speed `SDMSpeed(0)' is approximately = 1.50 + 0.1 * n bytes of data.

Time to execute block mode for a CR9000 in milliseconds with default bus speed is approximately = 2.07 + 0.207 * n bytes of data.

Time to execute block mode for a CR5000 in milliseconds with maximum bus speed `SDMSpeed(12)' is approximately = 1.60 + 0.108 * n bytes of data.

Time to execute block mode for a CR5000 in milliseconds with default bus speed is approximately = 2.12 + 0.27 * n bytes of data.

This timing is only for the block mode instruction and any other instructions within the scan will reduce the maximum possible scan rate.

## 4.2 Datalogger Instruction

The SDM-CAN is controlled by an instruction called CANBUS. Please check that your datalogger's operating system includes this instruction. You may also require an update to your CRBASIC editor to get the full help screens. Contact Campbell Scientific if you need advice about upgrading your operating system.

The CANBUS instruction takes the form:

```
CANBUS(CANDATA(),ADDRESS,TIMEQUANTA,TSEG1,TSEG2,ID,
DATATYPE,STARTBIT,NUMBITS,NUMVALS,MULT,OFFSET)
```

**where:**

**CANDATA** is a variable or array which either holds data to be transmitted or will hold data that is to be read from the CAN-Bus.

**ADDRESS** is the SDM address of the SDM-CAN in question.

**TQUANTA, TSEG1** and **TSEG2** have the same function as in P118 above**.**

**ID** is the CAN ID, where the ID is entered as a single decimal equivalent. Entering the number as a *negative* value signifies it is an 11 bit ID, otherwise it is a 29-bit ID.

**NOTE** Due to current system constraints the ID parameter must be entered directly into the CanBus instruction.

**DATATYPE** is the same as in P118.

STARTBIT **is the same as in P118, except you enter a negative number instead of 'indexing' the number to signify lefthand referencing.**

**NUMBITS** is the same, and again a negative number is equivalent to indexing the value to enable an interrupt.

**NUMVALS, MULT** and **OFFSET** all have the same function**.**

### 4.2.1 Reading CAN Data

The following example reads a 16 bit engine speed value from a CAN network running at 250K baud.

```
'Set scan rate
Const PERIOD = 1                    'Scan interval number
Const P_UNITS = 2                   'Scan interval units (Secs)
'\\\\\\\\\\\\\\\\\\\\\\\\ CANBUS CONSTANTS ////////////////////
'------------------- Physical Network Parameters -----------------
Const TQUANT = 4                    ')Set SDM-CAN to 250K
Const TSEG1 = 5                     ')Network speed
Const TSEG2 = 2                     ')
'---------------------- Data Frame Parameters --------------------
'___________________________CANbus Block1___________________________
'Collect and retrieve 16 bit data value
'Data type 2, unsigned integer, least significant byte first
Const CANREP1 = 1                   'Repetitions
Const ADDR1 = 0                     'SDM address of SDM-CAN Module
Const DTYPE1 = 2                    'Collect and retrieve data values
Const STBIT1 = 33                   'Start position in data frame
Const NBITS1 = 16                   'Number of bits/value
Const NVALS1 = 1                    'Number of values
Const CMULT1 = 0.4                  'Multiplier
Const COSET1 = 0                    'Offset
Dim CANBlk1(CANREP1)                'Dimensioned source
'\\\\\\\\\\\\\\\\\\ ALIASES & OTHER VARIABLES /////////////////
Alias CANBlk1(1) = Engine_Speed     'Assign an alias name to CANBlk1(1)
'\\\\\\\\\\\\\\\\\\\\\\\\\\\\ PROGRAM ///////////////////////////
BeginProg                           'Program begins here
'MainSequence
Scan(PERIOD,P_UNITS,0,0)            'Scan once every 1 Secs, non-burst
'___________________________ CAN Blocks ___________________________
'Retrieve Data from CAN network
CanBus(CANBlk1(),ADDR1,TQUANT,TSEG1,TSEG2,217056256,
DTYPE1,STBIT1,NBITS1,NVALS1,CMULT1,COSET1)
    Next Scan                       'Loop up for the next scan
EndProg                             'Program ends here
```

### 4.2.2 Simple CAN Data Transmission

The following example transmits a 16 bit temperature value to a CAN network running at 250K baud.

```
'Set scan rate
Const PERIOD = 1                     'Scan interval number
Const P_UNITS = 2                    'Scan interval units (Secs)
\\\\\\\\\\\\\\\\\\\\ THERMOCOUPLE CONSTANTS ////////////////////
'___________________________ Temp Block1 ___________________________
Const TRNG1 = 17                     'Block1 measurement range (50 mV)
Const TTYPE1 = 0                     'Block1 thermocouple type (T)
Const TREP1 = 1                      'Block1 repetitions
Const TSETL1 = 30                    'Block1 settling time (usecs)
Const TINT1 = 20000                  'Block1 integration time (usecs)
Const TMULT1 = 1                     'Block1 default multiplier
Const TOSET1 = 0                     'Block1 default offset
Dim TBlk1(TREP1)                     'Block1 dimensioned source
Units TBlk1 = Deg_C                  'Block1 default units (Deg_C)
'\\\\\\\\\\\\\\\\\\\\\\\\\\\\ CANBUS CONSTANTS ////////////////////
'------------------- Physical Network Parameters -----------------
Const TQUANT = 4                     ')Set SDM-CAN to 250K
Const TSEG1 = 5                      ')Network speed
Const TSEG2 = 2                      ')
'---------------------- Data Frame Parameters --------------------
'___________________________CANbus Block1___________________________
'Send switch value Data type 32
Const CANREP1 = 1                    'Repetitions
Const ADDR1 = 0                      'SDM address of SDM-CAN Module
Const DTYPE1 = 32                    'Send switch value
Const STBIT1 = 0                     'Start position in data frame
```

```
Const NBITS1 = 0                    'Number of bits/value
Const NVALS1 = 0                    'Number of values
Const CMULT1 = 1.0                  'Multiplier
Const COSET1 = 0                    'Offset
Dim Switches(CANREP1)               'Dimensioned source
'_____________________________CANbus Block2_________________________
'Transmit 16 bit data value
'Data type 20, unsigned integer, least significant byte first
Const CANREP2 = 1                   'Repetitions
Const ADDRESS2 = 0                  'SDM address of SDM-CAN Module
Const DTYPE2 = 20                   'Tx, unsigned int, LSB 1st
Const STBIT2 = 49                   'Start position in data frame
Const NBITS2 = 16                   'Number of bits/value
Const NVALS2 = 1                    'Number of values
Const CMULT2 = 1                    'Multiplier
Const COSET2 = 0                    'Offset
'\\\\\\\\\\\\\\\\\\ ALIASES & OTHER VARIABLES ////////////////
Public Flag(8)                      'General Purpose Flags
Dim TRef(1)                         'Declare Reference Temp variable
'\\\\\\\\\\\\\\\\\\\\\\\\\\\\ PROGRAM ///////////////////////////
BeginProg                           'Program begins here
'MainSequence
Scan(PERIOD,P_UNITS,0,0)            'Scan once every 1 Secs, non-burst
'___________________________ Temp Blocks ___________________________
ModuleTemp(TRef(),1,5,100)
TCSE(TBlk1(),TREP1,TRNG1,5,1,TTYPE1,TRef(1),
TSETL1,TINT1,TMULT1,TOSET1)
'___________________________ CAN Blocks ___________________________
'When Flag 1 is high set SDM-CAN switches to transmit mode
If Flag(1) Then
'Load variable with value for switches
Switches = 3
'Send switch settings to SDM-CAN
CanBus(Switches,ADDR1,TQUANT,TSEG1,TSEG2,0,
DTYPE1,STBIT1,NBITS1,NVALS1,CMULT1,COSET1)
'Set flag 1 low after sending switch settings
Flag(1) = False
EndIf

'Transmit Data on to CAN network
CanBus(TBlk1(),ADDR2,TQUANT,TSEG1,TSEG2,1,
DTYPE2,STBIT2,NBITS2,NVALS2,CMULT2,COSET2)
   Next Scan                        'Loop up for the next scan
EndProg                             'Program ends here
```

**NOTE** The default setting for the SDM-CAN internal software switches is 0. The switches must be set by using the data type 32 parameter to enable data transmission. Also remember to check the jumper settings inside the SDM-CAN if enabling transmission, as the default setting is for transmission to be disabled in hardware.

### 4.2.3 Digital I/O Triggered CANbus Measurements

Although the CR5000 and CR9000 do not have the interrupt feature that is available on the CR10X, CR7 and CR23X it is possible to connect the I/O line from the SDM-CAN to a Digital I/O port. A program control instruction can then be used to trigger the retrieval of new CAN data from the SDM-CAN when the port is high. An example of this is shown below

```
'Set scan rate
Const PERIOD = 1                        'Scan interval number
Const P_UNITS = 2                       'Scan interval units (Secs)



'\\\\\\\\\\\\\\\\\\\\\\\\ CANBUS CONSTANTS ////////////////////
'------------------- Physical Network Parameters -----------------
Const TQUANTA = 4                    ')Set SDM-CAN to 250K
Const TSEG1 = 5                      ')Network speed
Const TSEG2 = 2                      ')
'---------------------- Data Frame Parameters --------------------
'____________________________CANbus Block1__________________________
Const CANREP1 = 1                    'Repetitions
Const ADDRESS1 = 0                   'SDM address of SDM-CAN Module
Const DATATYPE1 = 1                  'Collect and retrieve data values
Const STARTBIT1 = 1                  'Start position in data frame
Const NUMBITS1 = -16                 'Number of bits/value - for interrupt
Const NUMVALS1 = 1                   'Number of values
Dim CANBlk1(CANREP1)                 'Dimensioned source
Dim NewData
'\\\\\\\\\\\\\\\\\\ ALIASES & OTHER VARIABLES /////////////////
Alias CANBlk1(1) = Accel_Pedal    'Assign an alias name to CANBlk1(1)
'\\\\\\\\\\\\\\\\\\\\\\\\\\\\ PROGRAM ///////////////////////////
BeginProg                               'Program begins here
'MainSequence
Scan(PERIOD,P_UNITS,0,0)       'Scan once every 1 Secs, non-burst
'____________________________ CAN Blocks ___________________________
'Read status of digital I/O port, return value to NewData variable
   ReadIO(NewData,7,&B1)
'When digital I/O port is high retrieve data from CAN network
   If NewData > 0 Then
CanBus(CANBlk1(),ADDRESS1,TQUANTA,TSEG1,TSEG2, 217056000,
DATATYPE1,STARTBIT1,NUMBITS1,NUMVALS1,1,0)
   EndIf
Next Scan                         'Loop up for the next scan
EndProg                           'Program ends here
```

**NOTE** Due to current system constraints the ID parameter must be entered directly into the CanBus instruction.

### 4.2.4 SlowSequence Instruction

It is also possible to have a SlowSequence Scan for low priority CANbus measurements that are not needed at the rate of the primary scan interval. The CR9000 or CR5000 tags on measurement instructions from the slow sequence scan to the normal scan as time allows.

Please refer to the CR9000 or CR5000 on-line help for a more detailed explanation of the SlowSequence instruction.

# 5. Using the RS232 Serial Diagnostics Port

## 5.1 Connecting to the RS232 User Port

The user communication port is a DCE configured, 9 pin RS232 port. The port automatically powers up when it detects valid RS232 signals and shuts down after a period of inactivity. The SDM-CAN automatically detects the incoming baud rates in the range from 1200 to 115200 baud. It is configured to work

with eight data bits, one start bit and stop bit and no parity. The pin out of the RS232 DCE 9 pin 'D' plug is shown in TABLE 5-1.

**TABLE 5-1. RS232 Pin Out**

| Pin Number | RS232 function | Direction of signal |
|---|---|---|
| 1 | DCD | input. |
| 2 | RX | input. |
| 3 | TX | Output. |
| 4 | DTR | Output. |
| 5 | 0V | Ground. |
| 6 | DSR | input. |
| 7 | RTS | Output. |
| 8 | CTS | input. |
| 9 | RI | input. |

To connect the SDM-CAN to most computers use a NULL Modem cable. When you try to communicate with the SDM-CAN, first send at least three 'Carriage Returns' so the SDM-CAN can recognize the baud rate at which you are communicating. As soon as your baud rate has been detected, the SDM-CAN will return the prompt 'CAN>' to your terminal window. If you have just powered the SDM-CAN up, you must wait until the LED status flash has finished before you attempt to communicate.

The User Command interface will accept a number of commands which allow the user to view CAN frames, view set-up and other debug tools. These commands are discussed below.

## 5.2 Diagnostic Commands

Most commands are sent in normal ASCII text. The interface is not case sensitive and supports backspace for correction of typing errors. Normally you would execute these commands from a PC which is running a terminal emulator such as Hyperterminal.

Some parameters for the commands are normally entered in decimal base 10 format, but you can also enter them in hex format if you precede the number with '0x'. For example, $123456_{10}$ can be entered 'as it is' or, alternatively, in hex format $0x1e240_{16}$.

The diagnostic commands are listed below:

**BINS** – This command will cause a hex dump of the bins configured by the datalogger program. The output for each line is as follows:

Bin number, Data type, Start bit, Number of bits, Buffer pointer, Bin flags, Number of values, TQUANTA, TSEG1, TSEG2, SDM mode and CAN ID. These fields are in raw format and may contain flags to indicate modes. This command is used by Campbell Scientific for diagnostic purposes only.

**BUFFERS** – Takes no parameters. This command will dump the buffers configured by the datalogger program.

The output format is:

On the first line after the command, the number of buffers used in shown in hex format, then on each successive line the buffer set-up is dumped in the following hex form: Buffer Number, Frame ID, Info Byte, Flags, Working Buffer, Read Buffer, Bin Number Pointer. This command is only normally used by Campbell Scientific for diagnostic purposes.

**CANBAUD nnnn** – Scans the CANBUS to attempt to ascertain the current baud rate. Parameter 'n' is in the range of 0-255 and is the amount of time, in steps of 50ms, the SDM-CAN should dwell at each baud rate looking for CANBUS activity. If the 'n' parameter is omitted, two seconds dwell time will be used by default.

The CANBUS is scanned for the following baud rates:

20K, 50K, 125K, 250K, 500K, 800K and 1 Megabaud.

As soon as the baud rate is found, the bus parameters TQUANTA, TESG1, TSEG2 and frames / n*50msec are reported to the user. The SDM-CAN will then be set to, and stay at, this baud rate until the changed by the datalogger following a re-compilation of the program by the user, or by a datalogger SDM communications error which will force the SDM-CAN to be reset. If no baud rate can be detected, an error is reported to the user.

Because any communication errors cause a default back to the datalogger set baud rate, it is not recommended that this command is used for anything other than CANBUS diagnostic purposes.

**CLRERROR** – Takes no parameters. This command will clear all the error counters Transmit, Receive, Overrun and Watch-dog to zero and clear a bus off condition.

**COMP** – Takes no parameters. This command will force the datalogger to re-send all of the configuration information again. This command is used by Campbell Scientific for debugging purposes only.

**HELP or ?** – Prints a list of valid user commands.

**HEXDUMP aaaa bbbb** – The first parameter ‘aaaa’ is the start address and the second parameter ‘bbbb’ is the number of bytes to dump. This command will dump the SDM-CAN’s full memory address range in a hex format. Each line that is output starts with the address followed by a16 byte value and then the ASCII characters. Any unprintable characters are represented by a ‘.’ character.

**MONITOR** nnnn – This command takes parameters in the range n=0 to n=2, where:

0 = monitor CANBUS for IDs used by the datalogger program (this is the default if the parameter is missing).

1 = monitor CANBUS for IDs that are allowed to pass through the simple IDfilter.
2 = monitor all CANBUS messages on the bus.

The monitor command will output a CAN frame in hex format when received. This command has a ring buffer that can hold 20 frames before it overflows. Monitor mode will not miss frames when they come in high speed burst's. This command will perform better the higher the terminal baud rate.

The hex output format of the command is as follows:- Info byte, Frame ID, Frame Data. To exit this command use 'CTRL-C'.

**SETCANBAUD nnnn nnnn nnnn** – Sets the CANBUS baud rate. The parameters are in the following order: TQUANTA = 0 - 63, TSEG1 = 0 - 15 and TSEG2 = 0 to 7. See Section 3, *Programming CR10X, CR7 and CR23X Dataloggers to use the SDM-CAN*, which gives details on how to calculate baud rate using these parameters. The SDM-CAN baud rate will stay set until it is changed by the datalogger following a program re-compilation by the user, or by a datalogger communications error, which will force the SDM-CAN to be reset.

If parameters are omitted, the default setting is 1 Megabaud with the following parameters: TQUANTA=1, TSEG1=5 and TSEG2=2.

Because any communication errors cause a default back to the datalogger set baud rate, it is not recommended that this command is used for anything other than CANBUS diagnostic purposes.

**STAT** – Takes no parameters. This command will return the CAN bus status as follows (each value is output on a new line in decimal format):

TQUANTA, TSEG1, TSEG2, Transmit error, Receive error, Overrun error, Watchdog error, Switch Settings, SDM Address, verbose mode, Bus mode and buffers = n n n where the first `n' is number of bins, the 2nd `n' is number of buffers and the 3rd `n' is number of frame buffers.

Bus mode indicates the following states:

0 = Bus-On; the SDM-CAN is involved in bus activities. Error counters are less than 96.
1 = Bus-On; the SDM-CAN is involved in bus activities. Error counters are equal to or greater than 96.
2 = Bus-Off; the SDM-CAN is not involved in bus activities. Error counters are less than 96.
3 = Bus-Off; the SDM-CAN is not involved in bus activities. Error counters are equal to or greater than 96.

**SWITCH nnnn –** This command changes the internal switch settings of the SDM-CAN. Please refer to Data type 32, in Section 3, *Programming CR10X, CR7 and CR23X Dataloggers to use the SDM-CAN*, above, for details of the switch parameter.

**VERBOSE nnnn** – The parameter nnnn is the verbose mode. With no parameter or when nnnn=0 verbose mode is off, otherwise if nnnn>0 verbose

mode is on. Currently verbose mode '1' turns on compile reports – used for Campbell Scientific debugging purposes only.

**VERSION** – Takes no parameters. This command will output the OS version number on the first line and the OS signature on the second line. If the signature is zero then the OS is corrupt and the SDM-CAN may malfunction. The Status is then returned (see STAT above).

## 5.3 Loading a New Operating System into the SDM-CAN Interface

When new functions are added, or bugs fixed, new versions of the operating system for the SDM-CAN interface may become available. As with most newer Campbell Scientific devices, the operating system is stored in non-volatile memory which can be re-programmed or updated by downloading a new operating system to the module from a PC running appropriate Campbell Scientific software (see below).

For downloading software you will need the following:

- *Device Configuration Utility* (*DevConfig*), which is bundled with *PC400* and *LoggerNet* datalogger support software. It is also available at no charge from *www.campbellsci.com/downloads*.
- A copy of the SDM-CAN operating system (copied to your hard-disk)
- A PC running Microsoft Windows
- A null-modem cable that connects the RS-232 port on the SDM-CAN to a serial port on your PC

The SDM-CAN also requires a 12V power supply, but does not have to be connected to a datalogger.

To load the new operating system take the following steps:

- Run *DevConfig* and select **SDM-CAN** for the device type.
- Follow the instructions presented in *DevConfig*.
- Wait until the process has completely finished and reports a successful upgrade before removing power from the SDM-CAN or quitting *DevConfig*.

# 6. Attributions

Microsoft and Windows are either registered trademarks or trademarks of Microsoft Corporation in the United States and/or other countries.

Primary content of this manual is used by permission and is consistent with the publication *SDM-CAN CAN-Bus Interface User Guide*, *Issued 26.6.07*. Adaptations of technical content are indicted by shading.

# Appendix A. Principles of Operation

## A.1 Data Collection

The SDM-CAN operation is based on a number of sequential buffers. The hardware has a dedicated CAN controller chip connected to a microprocessor which analyses and processes the raw CAN data and then transmits it to the datalogger.

When the CAN-Bus controller receives a good frame first of all it uses its internal hardware to filter out the frames of no interest to the user. If the frame ID satisfies the filter requirements then it allows the frame to be transferred to a hardware FIFO. This FIFO can hold up to 3 CAN frames. Whenever data is in this FIFO an interrupt mechanism will cause the SDM-CAN processor to read the data from the CAN controller.

When the processor reads the CAN frame it will do a more detailed check to see if the CAN frame ID is one of the ones required. This is because the hardware filter only matches an overall pattern and may let some CAN frames through that are not required. If the CAN frame ID is accepted, it will then be placed into the 'Working Buffer' of a 'Buffer Set', which is made up of a set of small buffers in memory, each set being dedicated to a specific packet ID.

The 'Buffer Set' consist of 'some configuration data', 'ID Buffer', 'Working Buffer' and a 'Read Buffer'. When the datalogger program is compiled it will configure the buffers with a specific ID in the 'ID Buffer' and also set up the buffer configuration. Many SDM-CAN instructions may share buffers because the CAN frame ID and configuration is the same.

Each SDM-CAN instruction will create what is called a BIN within the SDM-CAN. This BIN holds information such as which 'data type' to use, which 'Buffer Set' it should get the data from and where its 'New data flag' is located plus a large amount of other information.

The 'New data' flags are set when new data arrives into the 'Working Buffer' of the 'Buffer Set'. Because there could be multiple BINs using one 'Buffer Set' there will be multiple 'New data' flags as well, so all the relevant 'New data' flags will be set at the same time. When the datalogger program reaches a point where it needs to read the data, the SDM-CAN will first check the 'New data flag'. If this flag is clear, the datalogger will read the previous data value unless the switch is set to detect/prevent multiple reads (see Section 3, *Programming CR10X, CR7 and CR23X Dataloggers to use the SDM-CAN*) in which case an over-range value is read (-99999 on some dataloggers). The SDM-CAN will then clear the appropriate 'New data' flag relevant to the BIN and instruction that requested the data. Because there is effectively one 'New data' flag per call of P118 this means that you could read the same new data to many different locations. However, you should be aware that different data could be returned by the different calls of the instruction, as a new data frame *could* be captured as the datalogger works through the program table. This problem can be avoided by using the Global trigger function.

# A.2 Frame Transmission

When the datalogger program is first run it will set-up the SDM-CAN BINs and buffers. If the program has some P118 instructions that transmit to the CAN-Bus, then some of the Buffers will be set-up for transmission. When an instruction indicates that a transmission should take place, the datalogger first sends a BIN number. This number tells the SDM-CAN which BIN to use and, from the compile-time set up, what operation is required. In the case of transmission it would expect frame data to be sent from the datalogger.

On receiving the frame data from the datalogger the SDM-CAN will convert and shift the data into the correct position and then place it into the read buffer which is set as a 64 bit frame. Depending on your program, you could then continue to build a frame or decide to transmit it onto the CAN-Bus. If you have completed the building of a frame then you have the choice to either transmit it onto the CAN-Bus or set it up as a Remote Frame Response. For the transmitted frames, the SDM-CAN will set a flag in the buffer to indicate new data is ready for transmission. The SDM-CAN will scan the buffers, checking this flag in each buffer that is set for transmission. When it finds a flag that is set, it will first check if the transmitter is busy, and if it is will wait until it is free. The frame will then be transferred to the transmitter which will transmit it onto the bus. Finally the transmit data flag will be cleared.

When a frame is set up for a remote frame response, the frame is transferred into the working buffer ready for reception of a Remote Frame Request. When a Remote Frame Request is received, and is accepted as a valid frame, the SDM-CAN will find the relevant buffer, and will then set the data transmit flag. From then on it will follow the normal frame transmission protocol as described above.

# Appendix B. A Summary of Data Types

*A summary table of the data types is given below for quick reference.*

| Data Type | Description |
|---|---|
| 1 | Retrieve data; unsigned integer, MSB first |
| 2 | Retrieve data; unsigned integer, LSB first |
| 3 | Retrieve data; signed integer, MSB first |
| 4 | Retrieve data; signed integer, LSB first |
| 5 | Retrieve data; 4-byte IEEE FP; MSB first |
| 6 | Retrieve data; 4-byte IEEE FP; LSB first |
| 7 | Build data frame; unsigned integer, MSB first |
| 8 | Build data frame; unsigned integer, LSB first |
| 9 | Build data frame; signed integer, MSB first |
| 10 | Build data frame; signed integer, LSB first |
| 11 | Build data frame; 4-byte IEEE FP; MSB first |
| 12 | Build data frame; 4-byte IEEE FP; LSB first |
| 13 | Build data frame; unsigned integer, MSB first, ‘OR’ed. |
| 14 | Build data frame; unsigned integer, LSB first, ‘OR’ed. |
| 15 | Build data frame; signed integer, MSB first, ‘OR’ed. |
| 16 | Build data frame; signed integer, LSB first, ‘OR’ed. |
| 17 | Build data frame; 4-byte IEEE FP; MSB first, ‘OR’ed. |
| 18 | Build data frame; 4-byte IEEE FP; LSB first, ‘OR’ed. |
| 19 | Transmit data value to the CAN-Bus; unsigned integer, MSB first. |
| 20 | Transmit data value to the CAN-Bus; unsigned integer, LSB first. |
| 21 | Transmit data value to the CAN-Bus; signed integer, MSB first. |
| 22 | Transmit data value to the CAN-Bus; signed integer, LSB first. |
| 23 | Transmit data value to the CAN-Bus; 4-byte IEEE FP; MSB first. |
| 24 | Transmit data value to the CAN-Bus; 4-byte IEEE FP; LSB first. |
| 25 | Transmit previously built data frame to the CAN-Bus. |
| 26 | Set up previously built data frame as a Remote Frame Response. |
| 27 | Read counters |
| 28 | Read counters and reset. |

| Data Type | Description |
|---|---|
| 29 | Read SDM-CAN status<br>Status — Description<br>0000 — The SDM-CAN has bus activities; error counters < 96.<br>0001 — The SDM-CAN has bus activities; at least one error counter is >= 96.<br>0002 — The SDM-CAN is not involved in bus activities; error counters < 96.<br>0003 — The SDM-CAN is not involved in bus activities; at least one error counter >=96. |
| 30 | Read SDM-CAN operating system and version number |
| 31 | Send Remote Frame Request. |
| 32 | Set SDM-CAN's internal switches<br>Switch — Code — Description<br>A — 0 — Not used<br>B — 0 — returns the last value captured (default)<br>1 — returns –99999 if value already read by datalogger<br>C — 0 — Disable interrupts (default)<br>1 — Enable pulse interrupts<br>2 — Enable fast interrupts<br>3-7 — Not defined<br>8 — Place the SDM-CAN into low power stand-by mode.<br>9 — Leave switch setting unchanged.<br>D — 0 — Listen only (error passive) mode.<br>1 — Transmit once.<br>2 — Self-reception.<br>3 — Normal retransmission<br>4 — Transmit once<br>5 — Self-reception; self -test.<br>6 — Normal; self-test.<br>7 — Active at power-up.<br>8 — Not defined.<br>9 — Leave switch setting unchanged. |
| 33 | Read SDM-CAN's internal switches (see above) |

# Appendix C. Application of the SDM-CAN on Networks Complying with the J1939 SAE Standards

*This Appendix describes the use of the SDM-CAN in applications where the CAN network complies to the J1939 standard, which is common in truck, bus and marine applications in the USA. This appendix is not intended to act as a full reference to those standards, but to simply describe the coding of the ID parameter and to give examples of how to decode some of the common, defined J1939 data packets.*

## C.1 J1939 29-Bit Identifier Format

The J1939 identifier format consists of 6 predefined fields; for a 29-bit identifier these are:

P - Priority Field (3 bits)
R - Reserved Field (1 bit)
DP - Data Page Field (1 bit)
PF - PDU Format Field (8 bits)
PS - PDU Specific Field (8 bits)
SA - Source Address Field (8 bits)

**TABLE C-1. Mapping of the J1939 Fields into a 29-Bit Identifier**

| Bit | 28 | 27 | 26 | 25 | 24 | 23 | 22 | 21 | 20 | 19 | 18 | 17 | 16 | 15 | 14 | 13 | 12 | 11 | 10 | 9 | 8 | 7 | 6 | 5 | 4 | 3 | 2 | 1 | 0 |
|---|---|---|---|---|---|---|---|---|---|---|---|---|---|---|---|---|---|---|---|---|---|---|---|---|---|---|---|---|---|
| | P3 | P2 | P1 | R1 | DP | PF8 | PF7 | PF6 | PF5 | PF4 | PF3 | PF2 | PF1 | PS8 | PS7 | PS6 | PS5 | PS4 | PS3 | PS2 | PS1 | SA8 | SA7 | SA6 | SA5 | SA4 | SA3 | SA2 | SA1 |

## C.2 J1939 11-Bit Identifier Format

The J1939 identifier format consists of 2 predefined fields; for an 11-bit identifier these are:

P - Priority Field (3 bits)
SA - Source Address Field (8 bits)

**TABLE C-2. Mapping of the J1939 Fields into a 11-Bit Identifier**

| Bit | 10 | 9 | 8 | 7 | 6 | 5 | 4 | 3 | 2 | 1 | 0 |
|---|---|---|---|---|---|---|---|---|---|---|---|
| | P3 | P2 | P1 | SA8 | SA7 | SA6 | SA5 | SA4 | SA3 | SA2 | SA1 |

**NOTE** Details of identifier field values can be found in the SAE J1939 standard.

# C.3 J1939 Data Frame Format

The Data Frame consists of 8 bytes with byte one at the left side of the frame and byte eight at the right side. Within each byte, bit 8, the most significant bit is at the left side of the byte.

**NOTE** Multi-byte values are conventionally displayed with the least significant byte first. For example LSB of engine speed is Byte 4 and MSB is byte 5.

**TABLE C-3. J1939 Data Frame Format**

| 1 | 2 | 3 | 4 | 5 | 6 | 7 | 8 |
|---|---|---|---|---|---|---|---|
| 87654321 | 87654321 | 87654321 | 87654321 | 87654321 | 87654321 | 87654321 | 87654321 |

**NOTE** Details of specific data frame values can be found in the SAE J1939 standard.

# C.4 Retrieving J1939 Accelerator Pedal Position Data using a CR9000/CR5000 (Bus Speed 250k Baud)

## C.4.1 Encoding the Identifier Field Values

The following example shows how to encode the identifier field values into the format for the CR9000/CR5000 ID parameter.

The identifier field values for the CAN Data Frame are as follows:

| | |
|---|---|
| Priority | $3_{10}$ |
| Reserved | $0_{10}$ |
| Data Page | $0_{10}$ |
| PDU Format | $240_{10}$ |
| PDU Specific | $3_{10}$ |
| Source Address | $0_{10}$ |

These decimal values then need to be converted to binary and encoded into the 29 bit identifier.

| | |
|---|---|
| Priority | $011_2$ |
| Reserved | $0_2$ |
| Data Page | $0_2$ |
| PDU Format | $11110000_2$ |
| PDU Specific | $00000011_2$ |
| Source Address | $00000000_2$ |

**TABLE C-4. Mapping of J1939 Identifier Field values into a 29-Bit Identifier**

| Bit | 28 | 27 | 26 | 25 | 24 | 23 | 22 | 21 | 20 | 19 | 18 | 17 | 16 | 15 | 14 | 13 | 12 | 11 | 10 | 9 | 8 | 7 | 6 | 5 | 4 | 3 | 2 | 1 | 0 |
|---|---|---|---|---|---|---|---|---|---|---|---|---|---|---|---|---|---|---|---|---|---|---|---|---|---|---|---|---|---|
| SOF | P3 | P2 | P1 | R1 | DP | PF8 | PF7 | PF6 | PF5 | PF4 | PF3 | PF2 | PF1 | PS8 | PS7 | PS6 | PS5 | PS4 | PS3 | PS2 | PS1 | SA8 | SA7 | SA6 | SA5 | SA4 | SA3 | SA2 | SA1 |
| Value | 0 | 1 | 1 | 0 | 0 | 1 | 1 | 1 | 1 | 0 | 0 | 0 | 0 | 0 | 0 | 0 | 0 | 0 | 0 | 1 | 1 | 0 | 0 | 0 | 0 | 0 | 0 | 0 | 0 |

This gives a binary value of 01100111100000000001100000000 that can then be converted to $217056000_{10}$ and used as the ID parameter.

## C.4.2 Finding the Start Bit

The byte number of the Accelerator pedal position value is 2

**TABLE C-5. Accelerator Pedal Position Value Byte Number**

| 1 | 2 | 3 | 4 | 5 | 6 | 7 | 8 |
|---|---|---|---|---|---|---|---|
| 87654321 | 87654321 | 87654321 | 87654321 | 87654321 | 87654321 | 87654321 | 87654321 |

The start bit for this value is 49, as it is the least significant bit of the data value within the data frame that this parameter refers to.

An example for Accelerator pedal position is shown below.

```
'Set scan rate
Const PERIOD = 1                  'Scan interval number
Const P_UNITS = 2                 'Scan interval units (Secs)
'\\\\\\\\\\\\\\\\\\\\\\\\ CANBUS CONSTANTS ////////////////////
'------------------- Physical Network Parameters -----------------
Const TQUANT = 4                  ')Set SDM-CAN to 250K
Const TSEG1 = 5                   ')Network speed
Const TSEG2 = 2                   ')
'---------------------- Data Frame Parameters --------------------
'___________________________CANbus Block1_________________________
'Collect and retrieve 16 bit data value
'Data type 2, unsigned integer, least significant byte first
Const CANREP1 = 1                 'Repetitions
Const ADDRESS1 = 0                'SDM address of SDM-CAN
Const DATATYPE1 = 2               'Collect and retrieve data values
Const STARTBIT1 = 49              'Start position in data frame
Const NUMBITS1 = 8                'Number of bits/value
Const NUMVALS1 = 1                'Number of values
Dim CANBlk1(CANREP1)              'Dimensioned source

'\\\\\\\\\\\\\\\\\\ ALIASES & OTHER VARIABLES /////////////////
Alias CANBlk1(1) = Accel_Pedal    'Assign an alias name to CANBlk2(1)
'\\\\\\\\\\\\\\\\\\\\\\\\\\\\ PROGRAM ///////////////////////////
BeginProg                         'Program begins here
   'MainSequence
   Scan(PERIOD,P_UNITS,0,0)       'Scan once every 1 Secs, non-burst
'_____________________________ CAN Blocks ___________________________
'Retrieve Accelerator pedal position Data from CAN network
CanBus(CANBlk1(),ADDRESS1,TQUANTA,TSEG1,TSEG2,217056000,
DATATYPE1,STARTBIT1,NUMBITS1,NUMVALS1,0.4,0)
    Next Scan                    'Loop up for the next scan
EndProg                          'Program ends here
```

**NOTE** Due to current system constraints the ID parameter must be entered directly into the CanBus instruction.

# C.5 Retrieving J1939 Accelerator Pedal Position Data using a CR23X/CR10X (Bus Speed 250k Baud)

## C.5.1 Encoding the Identifier Field Values

The following example shows how to encode the identifier field values into the format for the CR23X/CR10X ID parameter.

The identifier field values for the CAN Data Frame are as follows:

| | |
|---|---|
| Priority | $3_{10}$ |
| Reserved | $0_{10}$ |
| Data Page | $0_{10}$ |
| PDU Format | $240_{10}$ |
| PDU Specific | $3_{10}$ |
| Source Address | $0_{10}$ |

These decimal values then need to be converted to binary and encoded into the 29 bit identifier.

| | |
|---|---|
| Priority | $011_2$ |
| Reserved | $0_2$ |
| Data Page | $0_2$ |
| PDU Format | $11110000_2$ |
| PDU Specific | $00000011_2$ |
| Source Address | $00000000_2$ |

**TABLE C-6. Mapping of J1939 Identifier Field Values into a 29-Bit Identifier**

| Bit | 28 | 27 | 26 | 25 | 24 | 23 | 22 | 21 | 20 | 19 | 18 | 17 | 16 | 15 | 14 | 13 | 12 | 11 | 10 | 9 | 8 | 7 | 6 | 5 | 4 | 3 | 2 | 1 | 0 |
|---|---|---|---|---|---|---|---|---|---|---|---|---|---|---|---|---|---|---|---|---|---|---|---|---|---|---|---|---|---|
| SOF | P3 | P2 | P1 | R1 | DP | PF8 | PF7 | PF6 | PF5 | PF4 | PF3 | PF2 | PF1 | PS8 | PS7 | PS6 | PS5 | PS4 | PS3 | PS2 | PS1 | SA8 | SA7 | SA6 | SA5 | SA4 | SA3 | SA2 | SA1 |
| Value | 0 | 1 | 1 | 0 | 0 | 1 | 1 | 1 | 1 | 0 | 0 | 0 | 0 | 0 | 0 | 0 | 0 | 0 | 0 | 1 | 1 | 0 | 0 | 0 | 0 | 0 | 0 | 0 | 0 |

This gives a binary value of 01100111100000000001100000000 that can then be split into three values for use as the ID parameter.

The first value is made up of bits 0..10 which is $01100000000_2$ this is converted to $768_{10}$ and used as the first ID parameter.

The second value is made up of bits 11..23 which is $1111000000000_2$ this is converted to $7680_{10}$ and used as the second ID parameter.

The third value is made up of bits 24..28 which is $01100_2$ this is converted to $12_{10}$ and used as the third ID parameter.

## C.5.2 Finding the Start Bit

The byte number of the Accelerator pedal position value is 2

**TABLE C-7. Accelerator Pedal Position Value Byte Number**

| 1 | 2 | 3 | 4 | 5 | 6 | 7 | 8 |
|---|---|---|---|---|---|---|---|
| 87654321 | 87654321 | 87654321 | 87654321 | 87654321 | 87654321 | 87654321 | 87654321 |

The start bit for this value is 49, as it is the least significant bit of the data value within the data frame that this parameter refers to.

An example for Accelerator pedal position is shown below.

```
;{CR23X}
;
*Table 1 Program
  01:  1.0       Execution Interval (seconds)

;Retrieve Accelerator pedal position Data from CAN network
8:  SDM-CAN (P118)
  1:   0         SDM Address
  2:   4         Time Quanta
  3:   5         Tseg1
  4:   2         Tseg2
  5:   768       ID Bits 0..10 (-- for 11-bit CAN ID)
  6:   7680      ID Bits 11..23
  7:   12        ID Bits 24..28
  8:   2         Rx, unsigned int, LSB 1st
  9:   49        Start Bit No.
  10:  8         No. of Bits
  11:  1         No. of Values
  12:  7         Loc [ Throttle   ]
  13:  0.125     Mult
  14:  0.0       Offset

*Table 2 Program
  02:  0.0000  Execution Interval (seconds)

*Table 3 Subroutines

End Program
```

# Appendix D. Examples of CAN Data Frames and Data Encoding and Decoding

*This Appendix gives examples of typical CAN data frames with worked examples of how to encode or decode such data using the SDM-CAN.*

Bits are Transmitted (Txed) or Received (Rxed) starting from the left of the data frame.

Txed/Rxed first → Txed/Rxed last

**64bit Data Frame**

| Bit order within bytes | 87654321 | 87654321 | 87654321 | 87654321 | 87654321 | 87654321 | 87654321 | 87654321 |
|---|---|---|---|---|---|---|---|---|
| Byte order | Byte 1 | Byte 2 | Byte 3 | Byte 4 | Byte 5 | Byte 6 | Byte 7 | Byte 8 |
| Right Hand Ref | 64 57 | 56 49 | 48 41 | 40 33 | 32 25 | 24 17 | 16 9 | 8 1 |
| Left Hand Ref | 1 8 | 9 16 | 17 24 | 25 32 | 33 40 | 41 48 | 49 56 | 57 64 |

For the Left Hand Reference, some manufacturers may number the bits in the following order:

| | | | | | | | | |
|---|---|---|---|---|---|---|---|---|
| Left Hand Ref | 8 1 | 16 9 | 24 17 | 32 25 | 40 33 | 48 41 | 56 49 | 64 57 |

An additional variation is that sometimes the bit numbering starts from 0 instead of 1.

**16bit Data Frame**

| Bit order within bytes | 87654321 | 87654321 |
|---|---|---|
| Byte order | Byte 1 | Byte 2 |
| Right Hand Ref | 16 9 | 8 1 |
| Left Hand Ref | 1 8 | 9 16 |

Data encoded/decoded from right to left in all cases.

←

**Examples of values within a data-frame**

**16bit data frame with a one value 16bit unsigned integer LSByte first**

| | | |
|---|---|---|
| Rxed Bit order within bytes | 87654321 | 87654321 |
| Rxed Byte order | Byte 1 | Byte 2 |
| Values | A | |
| Bit order within values | 8 1 | 16 9 |
| Value byte order | LSByte | MSByte |
| Start bit (parameter 09:) RH ref | 16 **9** | 8 1 |
| Start bit (parameter 09:) LH ref | 1 **8** | 9 16 |

This number is entered into the P118 DLD instruction

```
Start bit (parameter 09:) Right Hand reference.
1:  SDM-CAN (P118)
  1:   0          SDM Address
  2:   1          Time-quanta
  3:   5          Tseg1
  4:   2          Tseg2
  5:   1000       ID Bits 0..10
  6:   0000       ID Bits 11..23
  7:   00         ID Bits 24..28
  8:   2          Rx, unsigned int, LSB 1st
  9:   9          Start Bit No.
  10:  16         No. of Bits
  11:  1          No. of Values
  12:  1          Loc [ value_A   ]
  13:  1.0        Mult
  14:  0.0        Offset

Start bit (parameter 09:) Left Hand reference.
2:  SDM-CAN (P118)
  1:   00         SDM Address
  2:   1          Time-quanta
  3:   5          Tseg1
  4:   4          Tseg2
  5:   1001       ID Bits 0..10
  6:   0000       ID Bits 11..23
  7:   00         ID Bits 24..28
  8:   2          Rx, unsigned int, LSB 1st
  9:   8        --                      Start Bit No.
  10:  16         No. of Bits
  11:  1          No. of Values
  12:  1          Loc [ value_A   ]
  13:  1.0        Mult
  14:  0.0        Offset
```

**32bit data frame with two 16bit unsigned integer values LSByte first.**

| Rxed Bit order within bytes | 87654321 | 87654321 | 87654321 | 87654321 |
|---|---|---|---|---|
| Rxed Byte order | Byte 1 | Byte 2 | Byte 3 | Byte 4 |
| Values | B | | A | |
| Bit order within values | 8 1 | 16 9 | 8 1 | 16 9 |
| Value byte order | LSByte | MSByte | LSByte | MSByte |
| Start bit (parameter 09:) RH ref | 32 25 | 24 17 | 16 **9** | 8 1 |
| Start bit (parameter 09:) LH ref | 1 8 | 9 16 | 17 **24** | 25 32 |

```
Start bit (parameter 09:) Right Hand reference.
1:  SDM-CAN (P118)
  1:   0          SDM Address
  2:   1          Time-quanta
  3:   5          Tseg1
  4:   2          Tseg2
  5:   1000       ID Bits 0..10
  6:   0000       ID Bits 11..23
  7:   00         ID Bits 24..28
  8:   2          Rx, unsigned int, LSB 1st
  9:   9          Start Bit No.
  10:  16         No. of Bits
  11:  2          No. of Values
  12:  1          Loc [ value_A   ]
  13:  1.0        Mult
  14:  0.0        Offset

Start bit (parameter 09:) Left Hand reference.
2:  SDM-CAN (P118)
  1:   00         SDM Address
  2:   1          Time-quanta
  3:   5          Tseg1
  4:   4          Tseg2
  5:   1001       ID Bits 0..10
  6:   0000       ID Bits 11..23
  7:   00         ID Bits 24..28
  8:   2          Rx, unsigned int, LSB 1st
  9:   24       --                      Start Bit No.
  10:  16         No. of Bits
  11:  2          No. of Values
  12:  1          Loc [ value_A   ]
  13:  1.0        Mult
  14:  0.0        Offset
```

**24bit data frame with two 12bit unsigned integer values LSByte first**

| Rxed Bit order within bytes | 87654321 | | 87654321 | | | | 87654321 | |
|---|---|---|---|---|---|---|---|---|
| Rxed Byte order | Byte 1 | | Byte 2 | | | | Byte 3 | |
| Values | B | | A | | B | | A | |
| Bit order within values | 8 | 1 | 4 | 1 | 12 | 9 | 12 | 5 |
| Value byte order | LSByte | | LSNib | | MSNib | | MSByte | |
| Start bit (parameter 09:) RH ref | 24 | 17 | 16 | **13** | 12 | 9 | 8 | 1 |
| Start bit (parameter 09:) LH ref | 1 | 8 | 9 | **12** | 13 | 16 | 17 | 24 |

```
Start bit (parameter 09:) Right Hand reference.
1:  SDM-CAN (P118)
  1:   0          SDM Address
  2:   1          Time-quanta
  3:   5          Tseg1
  4:   2          Tseg2
  5:   1000       ID Bits 0..10
  6:   0000       ID Bits 11..23
  7:   00         ID Bits 24..28
  8:   2          Rx, unsigned int, LSB 1st
  9:   13         Start Bit No.
  10:  12         No. of Bits
  11:  2          No. of Values
  12:  1          Loc [ value_A   ]
  13:  1.0        Mult
  14:  0.0        Offset

Start bit (parameter 09:) Left Hand reference.
2:  SDM-CAN (P118)
  1:   00         SDM Address
  2:   1          Time-quanta
  3:   5          Tseg1
  4:   4          Tseg2
  5:   1001       ID Bits 0..10
  6:   0000       ID Bits 11..23
  7:   00         ID Bits 24..28
  8:   2          Rx, unsigned int, LSB 1st
  9:   12       --                      Start Bit No.
  10:  12         No. of Bits
  11:  2          No. of Values
  12:  1          Loc [ value_A   ]
  13:  1.0        Mult
  14:  0.0        Offset
```

**16bit data frame with one 12bit signed integer value LSByte first**

| Rxed Bit order within bytes | 87654321 | | 87654321 |
|---|---|---|---|
| Rxed Byte order | Byte 1 | | Byte 2 |
| Values | A | | S A |
| Bit order within values | 4 1 | | 12 5 |
| Value byte order | LSNib | | MSByte |
| Start bit (parameter 09:) RH ref | 16 **13** | 12 9 | 8 1 |
| Start bit (parameter 09:) LH ref | 1 **4** | 5 8 | 9 16 |

S = sign bit which is the MSBit of the value, bit 12.

```
Start bit (parameter 09:) Right Hand reference.
1:  SDM-CAN (P118)
  1:   0         SDM Address
  2:   1         Time-quanta
  3:   5         Tseg1
  4:   2         Tseg2
  5:   1000      ID Bits 0..10
  6:   0000      ID Bits 11..23
  7:   00        ID Bits 24..28
  8:   4         Rx, signed int, LSB 1st
  9:   13        Start Bit No.
  10:  12        No. of Bits
  11:  1         No. of Values
  12:  1         Loc [ value_A   ]
  13:  1.0       Mult
  14:  0.0       Offset

Start bit (parameter 09:) Left Hand reference.
2:  SDM-CAN (P118)
  1:   00        SDM Address
  2:   1         Time-quanta
  3:   5         Tseg1
  4:   4         Tseg2
  5:   1001      ID Bits 0..10
  6:   0000      ID Bits 11..23
  7:   00        ID Bits 24..28
  8:   4         Rx, signed int, LSB 1st
  9:   4       --                      Start Bit No.
  10:  12        No. of Bits
  11:  1         No. of Values
  12:  1         Loc [ value_A   ]
  13:  1.0       Mult
  14:  0.0       Offset
```

**40bit data frame with one 32bit IEEE floating point value LSByte first**

| Rxed Bit order within bytes | 87654321 | 87654321 | 87654321 | 87654321 | 87654321 |
|---|---|---|---|---|---|
| Rxed Byte order | Byte 1 | Byte 2 | Byte 3 | Byte 4 | Byte 5 |
| Values | | A | | | |
| Bit order within values | | 8 1 | 16 9 | 24 17 | 32 25 |
| Value byte order | | Mantisa | | | Exponent |
| Start bit (parameter 09:) RH ref | 40 33 | 32 **25** | 24 17 | 16 9 | 8 1 |
| Start bit (parameter 09:) LH ref | 1 8 | 9 **16** | 17 24 | 25 32 | 33 40 |

```
Start bit (parameter 09:) Right Hand reference.
1:  SDM-CAN (P118)
  1:   0          SDM Address
  2:   1          Time-quanta
  3:   5          Tseg1
  4:   2          Tseg2
  5:   1000       ID Bits 0..10
  6:   0000       ID Bits 11..23
  7:   00         ID Bits 24..28
  8:   6          Rx, real IEEE4, LSB 1st
  9:   25         Start Bit No.
  10:  32         No. of Bits
  11:  1          No. of Values
  12:  1          Loc [ value_A   ]
  13:  1.0        Mult
  14:  0.0        Offset

Start bit (parameter 09:) Left Hand reference.
2:  SDM-CAN (P118)
  1:   00         SDM Address
  2:   1          Time-quanta
  3:   5          Tseg1
  4:   4          Tseg2
  5:   1001       ID Bits 0..10
  6:   0000       ID Bits 11..23
  7:   00         ID Bits 24..28
  8:   6          Rx, real IEEE4, LSB 1st
  9:   16       --                      Start Bit No.
  10:  32         No. of Bits
  11:  1          No. of Values
  12:  1          Loc [ value_A   ]
  13:  1.0        Mult
  14:  0.0        Offset
```

**16bit data frame with one 16bit unsigned integer value MSByte first**

| | | |
|---|---|---|
| Rxed Bit order within bytes | 87654321 | 87654321 |
| Rxed Byte order | Byte 1 | Byte 2 |
| Values | A | |
| Bit order within values | 16 9 | 8 1 |
| Value byte order | MSByte | LSByte |
| Start bit (parameter 09:) RH ref | 16 9 | 8 **1** |
| Start bit (parameter 09:) LH ref | 1 8 | 9 **16** |

```
Start bit (parameter 09:) Right Hand reference.
1:  SDM-CAN (P118)
  1:   0          SDM Address
  2:   1          Time-quanta
  3:   5          Tseg1
  4:   2          Tseg2
  5:   1000       ID Bits 0..10
  6:   0000       ID Bits 11..23
  7:   00         ID Bits 24..28
  8:   1          Rx, unsigned int, MSB 1st
  9:   1          Start Bit No.
  10:  16         No. of Bits
  11:  1          No. of Values
  12:  1          Loc [ value_A   ]
  13:  1.0        Mult
  14:  0.0        Offset

Start bit (parameter 09:) Left Hand reference.
2:  SDM-CAN (P118)
  1:   00         SDM Address
  2:   1           Time-quanta
  3:   5          Tseg1
  4:   4          Tseg2
  5:   1001       ID Bits 0..10
  6:   0000       ID Bits 11..23
  7:   00         ID Bits 24..28
  8:   1          Rx, unsigned int, MSB 1st
  9:   16       --                      Start Bit No.
  10:  16         No. of Bits
  11:  1          No. of Values
  12:  1          Loc [ value_A   ]
  13:  1.0        Mult
  14:  0.0        Offset
```

**32bit data frame with two 16bit signed integer values MSByte first**

| Rxed Bit order within bytes | 87654321 | 87654321 | 87654321 | 87654321 |
|---|---|---|---|---|
| Rxed Byte order | Byte 1 | Byte 2 | Byte 3 | Byte 4 |
| Values | S B | | S A | |
| Bit order within values | 16 9 | 8 1 | 16 9 | 8 1 |
| Value byte order | MSByte | LSByte | MSByte | LSByte |
| Start bit (parameter 09:) RH ref | 32 25 | 24 17 | 16 9 | 8 **1** |
| Start bit (parameter 09:) LH ref | 1 8 | 9 16 | 17 24 | 25 **32** |

S = sign bit which is the MSBit of the values, bit 16.

```
Start bit (parameter 09:) Right Hand reference.
1:  SDM-CAN (P118)
  1:   0         SDM Address
  2:   1         Time-quanta
  3:   5         Tseg1
  4:   2         Tseg2
  5:   1000      ID Bits 0..10
  6:   0000      ID Bits 11..23
  7:   00        ID Bits 24..28
  8:   3         Rx, signed int, MSB 1st
  9:   1         Start Bit No.
  10:  16        No. of Bits
  11:  2         No. of Values
  12:  1         Loc [ value_A   ]
  13:  1.0       Mult
  14:  0.0       Offset

Start bit (parameter 09:) Left Hand reference.
2:  SDM-CAN (P118)
  1:   00        SDM Address
  2:   1         Time-quanta
  3:   5         Tseg1
  4:   4         Tseg2
  5:   1001      ID Bits 0..10
  6:   0000      ID Bits 11..23
  7:   00        ID Bits 24..28
  8:   3         Rx, signed int, MSB 1st
  9:   32      --                      Start Bit No.
  10:  16        No. of Bits
  11:  2         No. of Values
  12:  1         Loc [ value_A   ]
  13:  1.0       Mult
  14:  0.0       Offset
```

**24bit data frame with two 12bit unsigned integer values MSByte first**

| | | | | |
|---|---|---|---|---|
| Rxed Bit order within bytes | 87654321 | 87654321 | | 87654321 |
| Rxed Byte order | Byte 1 | Byte 2 | | Byte 3 |
| Values | B | | A | |
| Bit order within values | 12 5 | 4 1 | 12 9 | 8 1 |
| Value byte order | MSByte | LSNib | MSNib | LSByte |
| Start bit (parameter 09:) RH ref | 24 17 | 16 13 | 12 9 | 8 **1** |
| Start bit (parameter 09:) LH ref | 1 8 | 9 12 | 13 16 | 17 **24** |

```
Start bit (parameter 09:) Right Hand reference.
1:  SDM-CAN (P118)
  1:   0          SDM Address
  2:   1          Time-quanta
  3:   5          Tseg1
  4:   2          Tseg2
  5:   1000       ID Bits 0..10
  6:   0000       ID Bits 11..23
  7:   00          ID Bits 24..28
  8:   1          Rx, unsigned int, MSB 1st
  9:   1          Start Bit No.
  10:  12         No. of Bits
  11:  2          No. of Values
  12:  1          Loc [ value_A   ]
  13:  1.0        Mult
  14:  0.0        Offset

Start bit (parameter 09:) Left Hand reference.
2:  SDM-CAN (P118)
  1:   00         SDM Address
  2:   1          Time-quanta
  3:   5          Tseg1
  4:   4          Tseg2
  5:   1001       ID Bits 0..10
  6:   0000       ID Bits 11..23
  7:   00         ID Bits 24..28
  8:   1          Rx, unsigned int, MSB 1st
  9:   24       --                      Start Bit No.
  10:  12         No. of Bits
  11:  2          No. of Values
  12:  1          Loc [ value_A   ]
  13:  1.0        Mult
  14:  0.0        Offset
```

**16bit data frame with one 12bit unsigned integer value MSByte first**

| Rxed Bit order within bytes | 87654321 | | 87654321 |
|---|---|---|---|
| Rxed Byte order | Byte 1 | | Byte 2 |
| Values | A | | A |
| Bit order within values | 12 9 | | 8 1 |
| Value byte order | MSNib | | LSByte |
| Start bit (parameter 09:) RH ref | 16 13 | 12 9 | 8 **1** |
| Start bit (parameter 09:) LH ref | 1 4 | 5 8 | 9 **16** |

```
Start bit (parameter 09:) Right Hand reference.
1:  SDM-CAN (P118)
  1:   0         SDM Address
  2:   1         Time-quanta
  3:   5         Tseg1
  4:   2         Tseg2
  5:   1000      ID Bits 0..10
  6:   0000      ID Bits 11..23
  7:   00        ID Bits 24..28
  8:   1         Rx, unsigned int, MSB 1st
  9:   1         Start Bit No.
  10:  12        No. of Bits
  11:  1         No. of Values
  12:  1         Loc [ value_A   ]
  13:  1.0       Mult
  14:  0.0       Offset

Start bit (parameter 09:) Left Hand reference.
2:  SDM-CAN (P118)
  1:   00        SDM Address
  2:   1         Time-quanta
  3:   5         Tseg1
  4:   4         Tseg2
  5:   1001      ID Bits 0..10
  6:   0000      ID Bits 11..23
  7:   00        ID Bits 24..28
  8:   1         Rx, unsigned int, MSB 1st
  9:   16      --                      Start Bit No.
  10:  12        No. of Bits
  11:  1          No. of Values
  12:  1         Loc [ value_A   ]
  13:  1.0       Mult
  14:  0.0       Offset
```

**40bit data frame with one 32bit IEEE floating point value MSByte first**

| Rxed Bit order within bytes | 87654321 | 87654321 | 87654321 | 87654321 | 87654321 |
|---|---|---|---|---|---|
| Rxed Byte order | Byte 1 | Byte 2 | Byte 3 | Byte 4 | Byte 5 |
| Values | | A | | | |
| Bit order within values | | 32 25 | 24 17 | 16 9 | 8 1 |
| Value byte order | | Exponent | Mantisa | | |
| Start bit (parameter 09:) RH ref | 40 33 | 32 25 | 24 17 | 16 9 | 8 **1** |
| Start bit (parameter 09:) LH ref | 1 8 | 9 16 | 17 24 | 25 32 | 33 **40** |

```
Start bit (parameter 09:) Right Hand reference.
1:  SDM-CAN (P118)
  1:   0         SDM Address
  2:   1         Time-quanta
  3:   5         Tseg1
  4:   2         Tseg2
  5:   1000      ID Bits 0..10
  6:   0000      ID Bits 11..23
  7:   00        ID Bits 24..28
  8:   5         Rx, real IEEE4, MSB 1st
  9:   1         Start Bit No.
  10:  32        No. of Bits
  11:  1         No. of Values
  12:  1         Loc [ value_A   ]
  13:  1.0       Mult
  14:  0.0       Offset

Start bit (parameter 09:) Left Hand reference.
2:  SDM-CAN (P118)
  1:   00        SDM Address
  2:   1         Time-quanta
  3:   5         Tseg1
  4:   4         Tseg2
  5:   1001      ID Bits 0..10
  6:   0000      ID Bits 11..23
  7:   00        ID Bits 24..28
  8:   5         Rx, real IEEE4, MSB 1st
  9:   40      --                      Start Bit No.
  10:  32        No. of Bits
  11:  1         No. of Values
  12:  1         Loc [ value_A   ]
  13:  1.0       Mult
  14:  0.0       Offset
```

## Campbell Scientific Companies


**Campbell Scientific, Inc.**
815 West 1800 North
Logan, Utah 84321
UNITED STATES
*www.campbellsci.com* • info@campbellsci.com

**Campbell Scientific Canada Corp.**
14532 – 131 Avenue NW
Edmonton AB T5L 4X4
CANADA
*www.campbellsci.ca* • dataloggers@campbellsci.ca

**Campbell Scientific Africa Pty. Ltd.**
PO Box 2450
Somerset West 7129
SOUTH AFRICA
*www.campbellsci.co.za* • cleroux@csafrica.co.za

**Campbell Scientific Centro Caribe S.A.**
300 N Cementerio, Edificio Breller
Santo Domingo, Heredia 40305
COSTA RICA
*www.campbellsci.cc* • info@campbellsci.cc

**Campbell Scientific Southeast Asia Co., Ltd.**
877/22 Nirvana@Work, Rama 9 Road
Suan Luang Subdistrict, Suan Luang District
Bangkok 10250
THAILAND
*www.campbellsci.asia* • info@campbellsci.asia

**Campbell Scientific Ltd.**
Campbell Park
80 Hathern Road
Shepshed, Loughborough LE12 9GX
UNITED KINGDOM
*www.campbellsci.co.uk* • sales@campbellsci.co.uk

**Campbell Scientific Australia Pty. Ltd.**
PO Box 8108
Garbutt Post Shop QLD 4814
AUSTRALIA
*www.campbellsci.com.au* • info@campbellsci.com.au

**Campbell Scientific Ltd.**
3 Avenue de la Division Leclerc
92160 ANTONY
FRANCE
*www.campbellsci.fr* • info@campbellsci.fr

**Campbell Scientific (Beijing) Co., Ltd.**
8B16, Floor 8 Tower B, Hanwei Plaza
7 Guanghua Road
Chaoyang, Beijing 100004
P.R. CHINA
*www.campbellsci.com* • info@campbellsci.com.cn

**Campbell Scientific Ltd.**
Fahrenheitstraße 13
28359 Bremen
GERMANY
*www.campbellsci.de* • info@campbellsci.de

**Campbell Scientific do Brasil Ltda.**
Rua Apinagés, nbr. 2018 — Perdizes
CEP: 01258-00 — São Paulo — SP
BRASIL
*www.campbellsci.com.br* • vendas@campbellsci.com.br

**Campbell Scientific Spain, S. L.**
Avda. Pompeu Fabra 7-9, local 1
08024 Barcelona
SPAIN
*www.campbellsci.es* • info@campbellsci.es


*Please visit www.campbellsci.com to obtain contact information for your local US or international representative.*