CR21 Micrologger Manual

Campbell Scientific, Inc.
Revision 07/85

WARRANTY AND ASSISTANCE

The CR21 MICROLOGGER is warranted against defects in materials, workmanship, and software. This warranty applies for six months from date of delivery. We will repair or replace products which prove to be defective during the warranty period provided they are returned to CAMPBELL SCIENTIFIC, INC. No other warranty is expressed or implied. CAMPBELL SCIENTIFIC, INC. is not liable for consequential damages.

Products may not be returned without prior authorization. To obtain a Returned Materials Authorization (RMA) contact CAMPBELL SCIENTIFIC, INC., phone: (801) 753-2342. An RMA number will be issued in order to facilitate Repair Personnel in identifying an instrument upon arrival. Please write this number clearly on the outside of the shipping container.

CAMPBELL SCIENTIFIC, INC. does not accept collect calls.

Non-warranty products returned for repair should be accompanied by a Purchase Order to cover the repair.

TABLE OF CONTENTS

Warranty and Assistance i

Sections — Pages

1. Introduction
   1.1 General 1-1
   1.2 Programming Example 1-2

2. Sensor Input Connections and Installation
   2.1 Ground Connections 2-1
   2.2 Volts and Millivolts 2-4
   2.3 DC Excitation 2-5
   2.4 AC Excitation 2-6
   2.5 Pulse Counts 2-7
   2.6 Protection from the Environment 2-8
   2.7 Lightning Protection 2-10
   2.8 Summary of CR21 Specifications 2-12

3. Control Inputs and Outputs
   3.1 General 3-1

4. Programming the CR21
   4.1 Overview of the CR21 Operating System 4-1
   4.2 Programming the Input Table (*4 Mode) 4-4
   4.3 Monitoring the Sensors (*6 Mode) 4-7
   4.4 Programming the Output Table (*1,*2,*3 Modes) 4-8
   4.5 Setting the Clock (*5 Mode) 4-10
   4.6 Logging Data (*0 Mode) 4-11

5. Data Retrieval
   5.1 Final Data Storage 5-1
   5.2 Hardware Connections for Data Transfer 5-3
   5.3 Accessing Data in Final Data Memory 5-4
   5.4 Recalling Data to the Display (*7 Mode) 5-5
   5.5 Recording Data on the Cassette Recorder (*8 Mode)..... 5-5
   5.6 Recording Data on the CR56 Printer (*9 Mode) 5-8
   5.7 Telecommunications, Connections, and Protocol 5-9

6. Maintenance
   6.1 Battery Life and Service 6-1
   6.2 CR21L Sealed Lead Acid Battery Pack 6-2
   6.3 External Battery Packs 6-3
   6.4 CR21 Checkout and Calibration 6-3

TABLE OF CONTENTS

7. CR21 Programming Example
   7.1 General 7-1
   7.2 Parameter Passing Program Examples 7-9

APPENDICES

A. Input Program Library A-1
B. Output Program Library B-1
C. Applications PROM Program List C-1
D. CR21 Prompt Sheet D-1

FIGURES

1-1 CR21 MICROLOGGER 1-2
2-1 CR21 Block Diagram 2-2
2-2 021 Fiberglass Enclosure w/Grounding Busbar 2-3
2-3 Floating External DC Supply 2-4
2-4 Resistive Voltage Divider and Range Translator 2-4
2-5 Measuring Volts or Millivolts 2-5
2-6 Measuring Resistive Sensors with DC Excitation 2-6
2-7 Measuring Resistive Sensors with AC Excitation 2-7
2-8 Pulse Counting Hookup 2-8
2-9 CR21 and Recorder Mounting Diagram 2-9
2-10 CR21 Spark Gap Lightning Protection Diagram 2-11
3-1 I/O Port Connections 3-1
4-1 CR21 Operating System Chart 4-2
5-1 Final Data Storage Area 5-1
5-2 Data Retrieval Hardware 5-3
5-3 Format of Data Recorded onto Cassette 5-7
6-1 Exploded View of CR21 Battery Pack and Panel 6-2

TABLES

1-1 Key Definition Summary (also 4-2 p.4) 1-3
1-2 Keyboard Control Mode Summary (also 4-1 p.3) 1-3
4-3 Input Table Entry Format 4-5
4-4 Output Table Entry Format 4-9
4-5 Clock Parameters 4-10
5-1 C Command Data Output Format 5-11

EXAMPLES

1a	Input Programming	7-4
1b	Sensor Monitoring	7-5
1c	Change to Degrees Fahrenheit	7-5
1d	Output Programming	7-6
1e	Set Clock	7-7
1f	Recall Final Data	7-8

SECTION 1. INTRODUCTION

1.1 GENERAL

Campbell Scientific, Inc. (CSI) has combined the latest technology in microprocessors, solid state memories, and analog electronics to produce the CR21 MICROLOGGER. This miniature, nine-channel, computing data recorder can handle up to seven analog inputs and two pulse counting inputs. User programmable signal conditioning in the CR21 can measure volts, millivolts, AC and DC resistance, and pulse counts. The CR21 MICROLOGGER is well-suited to monitor signals from a wide variety of transducers recording such parameters as temperature, humidity, solar radiation, wind, pressure, precipitation, event occurrences and many others.

The CR21 MICROLOGGER is easy to use. A familiarity with Ohms Law and simple voltage dividers is helpful in understanding the operation of sensors used with the CR21. Section 2 and Appendix A provide detailed information on sensor hookup and input programs.

The CR21 MICROLOGGER is a battery-powered microcomputer with a real-time clock, a serial data interface, and a programmable analog-to-digital converter. Once each minute (ten seconds on special CR21's) the MICROLOGGER samples the input signals according to input programs specified in a user-entered input table, processes that data, and stores it according to output programs specified in a user-entered output table. The input and output processing capabilities of the CR21 are determined by the programs contained in the Applications Programmable Read-Only-Memory (PROM). Most CR21's contain the same standard input and output programs, but some may contain a nonstandard PROM due to special applications. Appendix C lists the PROM number in your CR21 and summarizes the input and output programs. Section 7 contains an example of a properly documented and coded data logging application. Appendix A describes the input programs and Appendix B describes the output programs.

The following introduction steps you through an example of connecting a sensor, programming an input and output table, monitoring the data output on the display, and logging data into final memory. You may not understand all the commands at this time, but it will become clear when you study Section 4 of the manual on programming the CR21.

1.2 PROGRAMMING EXAMPLE

As a brief demonstration of programming the CR21, we will step you through measuring and recording temperature on one channel using a CSI Model 101 Thermistor Temperature Probe. In this example, reference is made to the CR21 panel shown in Figure 1-1.

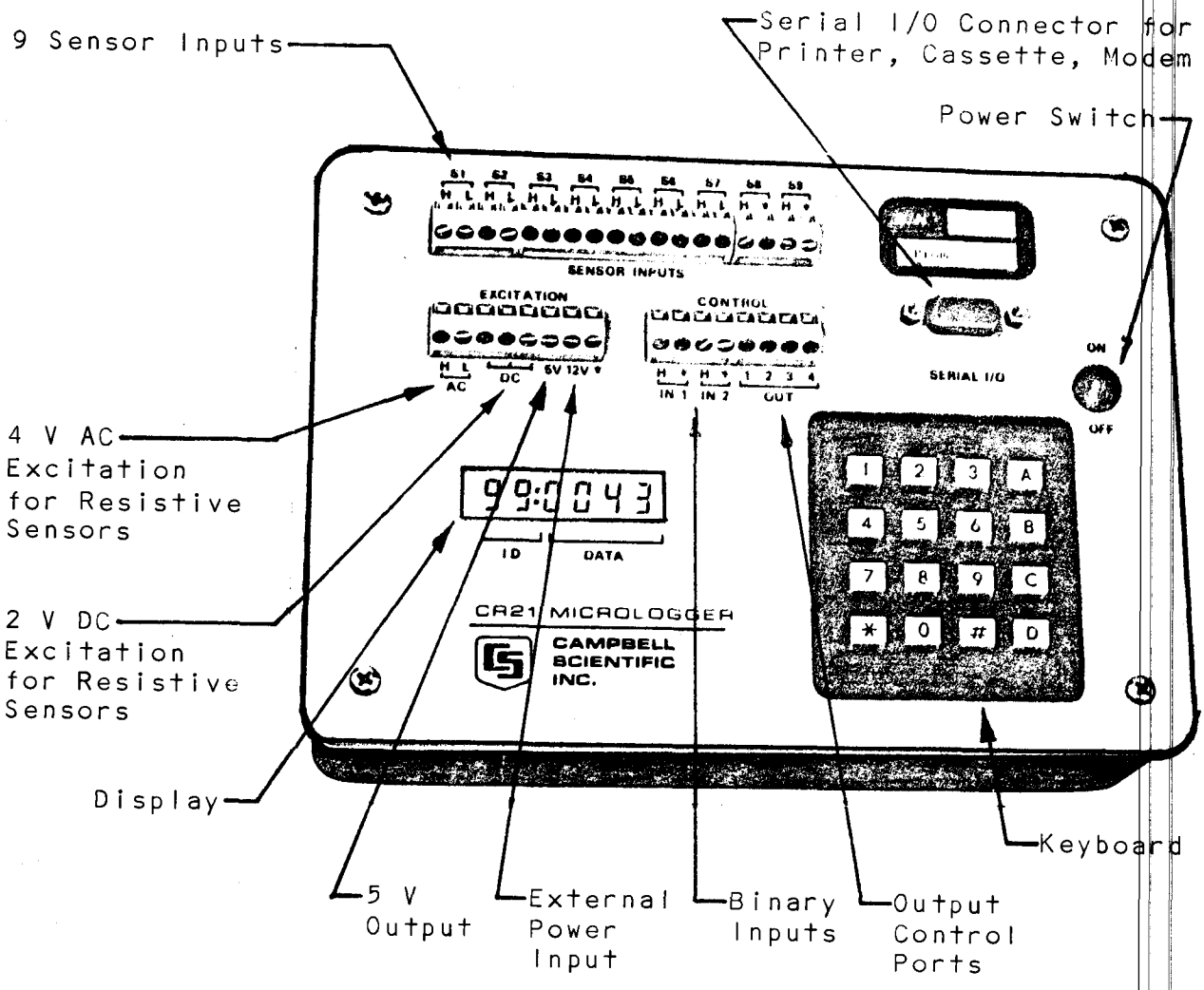

Figure 1-1 CR21 MICROLOGGER.

CONNECTING THE THERMISTOR

Connect the excitation lead (black) of the thermistor probe to the +2 V DC excitation terminal, the analog common (green) to the low side of Channel 2 (L), the signal (red) to the high side of Channel 2 (H), and the ground (white) to any of the grounds on the data logger (⏚). We could have used any of the other channels up through Channel 7.

PROGRAMMING THE CR21

The definitions of the keys are summarized below in Table 1-1.

Table 1-1 KEY DEFINITION SUMMARY

Key	Action
0-9	Enter numeric data
*	Enter control mode
A	Advance through a program table or data, store displayed number, or execute a control program
B	Begin at the start of the active control mode
C	Change the sign of the number to be entered
D	Decimal point
#	Clear entry or abort memory dump

The CR21 has ten keyboard control modes summarized in Table 1-2. The control modes are entered by first pressing the "*" button and then a digit 0-9 for the control mode desired. If Control Mode 4 is entered (*4 Mode), for example, the display will show 04:bbbb (b=blank).

Table 1-2 KEYBOARD CONTROL MODE SUMMARY

Key	Mode
*0	Log data
*1	Output Processing Table 1
*2	Output Processing Table 2
*3	Output Processing Table 3
*4	Input Processing Table
*5	Set day, hour, and minute
*6	Monitor current sensor readings
*7	Display stored data
*8	Memory dump to cassette
*9	Memory dump to printer

The first step in our example is to program the input table. The input table is a set of numbers entered into the CR21 which specify the input programs to be executed. The Input programs specify the type of signal conditioning and A/D conversion to be done including linearization of selected input signals. It is possible to enter a total of nine input programs with each input program operating on a different channel on the CR21. The Input Table Coding Form is filled in by the user and lists the input programs to be used in the input table.

Turn on the power switch and enter the input program number, multiplier, and offset as follows:

Example 1a — INPUT PROGRAMMING

Key in	ID Data	Description
*4	04:	*4 Mode--Input Processing Table
2	04:2	Input Channel 2
A	21:0000	Pointer advanced to first entry for Channel 2 (input program number)
7	21:7.	Input Program 7 is for the temperature sensor
A	22:0.000	Entry completed--pointer advanced to second entry for Channel 2 (multiplier)
1	22:1.	Multiplier (1 for °C; 1.8 for °F)
A	23:0.000	Entry completed--pointer advanced to third entry for Channel 2 (offset)
0	23:0.000	Offset (0 for °C; 32 for °F)
A	31:	Entry completed--pointer advanced to first entry for Channel 3

Channel 2 is now programmed and the input table is waiting for an input program for Channel 3. Rather than program any more input channels now, let's monitor the probe temperature on the display. In the *6 Mode the display shows the channel being monitored and the data from that channel. Enter the *6 Mode and monitor temperature as follows:

Example 1b SENSOR MONITOR

Key in	ID Data	Description
*6	06:	*6 Mode--Monitor current sensor readings
2	06:2	Input Channel 2
A	02:21.00	Temperature is 21.0° C

Sensor monitoring in the *6 Mode is done by continuously scanning all the sensors and displaying only the selected input channel. Each scan takes about .3 to 2 seconds depending on what has been programmed into the input table. To change the selected channel, press, then release the key corresponding to the channel number to be displayed. At the completion of the next scan, the display will change to the new channel. To exit the continuous monitor mode, press the * Key and wait for a display of 00:0000, then press the key indicating the next control mode you want to enter.

The temperature readings can be changed to degrees Fahrenheit by entering a multiplier of 1.8 and an offset of 32.

Example 1c CHANGE TO DEGREES FAHRENHEIT

Key in	ID Data	Description
*4	04:	*4 Mode--Input Processing Table
2	04:2	Input Channel 2
A	21:0007	Pointer advanced to first entry for Channel 2 (Input Program 7 remains the same)
A	22:1.000	Pointer advanced to second entry for Channel 2 (multiplier)
1 D 8	22:1.8	Multiplier is 1.8 for °F
A	23:0.000	Entry completed--pointer advanced to third entry for Channel 2 (offset)
32	23:32.	Offset is 32 for °F
A	31:0000	Entry completed--pointer advanced to first entry for Channel 3
*6	06:	*6 Mode--Monitor current sensor readings
2	06:2	Input Channel 2
A	02:69.80	Temperature is 69.80° F

Now that we have observed the operation of the temperature sensor, we can leave the input table and program one of the three output tables. An output table is a set of numbers that is entered into the CR21 which specify the output programs to be executed. The output programs further process the sensor outputs to obtain averages, maximums, minimums, etc. Make the output table entries as follows:

Example 1d — OUTPUT PROGRAMMING

Key in	ID Data	Description
*1	01:	*1 Mode--Output Processing Table 1
A	03:0000	Pointer advanced to enter output time interval (data storage interval)
3	03:3.	Output time interval for Output Table 1 (3 minutes)
A	11:0000	Entry completed--pointer advanced to first entry for Output Table 1 (output program number)
51	11:51.	Output Program 51 (Averaging)
A	12:0000	Entry completed--pointer advanced to enter Parameter 1 for Output Program 51
2	12:2.	Parameter 1 (Input Channel 2 --temperature probe)
A	13:0000	Entry completed--pointer advanced to enter Parameter 2 for Output Program 51 (optional modifier not used for Program 51)
A	21:0000	Pointer advanced to second entry for Output Table 1 (output program number)
53	21:53.	Output Program 53 (Maximum Value)
A	22:0000	Entry completed--pointer advanced to enter Parameter 1 for Output Program 53
2	22:2.	Parameter 1 (Input Channel 2)
A	23:0000	Entry completed--pointer advanced to enter Parameter 2 for Output Program 53 (optional modifier not used for Program 53)
A	31.0000	Pointer advanced to third entry for Output Table 1 (output program number)
54	31:54	Output Program 54 (Minimum Value)
A	32:0000	Entry completed--pointer advanced to enter Parameter 1 for Output Program 54
2	32:2.	Parameter 1 (Input Channel 2)
A	33:0000	Entry completed--pointer advanced to enter Parameter 2 for Output Program 54 (optional modifier not used for Program 54)
A	41:0000	Pointer advanced to fourth entry for Output Table 1, etc. up through nine

Go to the *5 Mode and set the clock as follows:

Example 1e — SET CLOCK

Key in	ID Data	
*5	05:	*5 Mode--Set day, hour, minute
A	91:0000	Pointer advanced to enter Julian Day
63	91:63.	Julian Day (63)
A	92:0000	Entry completed--pointer advanced to enter hour
11	92:11.	Hour (11)
A	93:0000	Entry completed--pointer advanced to enter minute
32	93:32.	Minute (32)
A	05:	Clock set complete--seconds are set to zero providing synchronization to the nearest 10 seconds
*0	99:1133	*0 Mode--Log data--display shows current time (11:33)

Entering the *0 Mode leaves the system logging data. From this point on, the CR21 will log data into its memory starting when the displayed time is evenly divisible by the programmed output time interval (3 minutes). Since the output time is automatically synchronized to the even hour or day, the first output interval will be shorter and should be considered when evaluating any totalized data. The colon between the fourth and fifth digits of the display will flash while the sensors are being scanned. The first input scan will occur within two scan intervals after switching to the *0 Mode. As the output interval is completed, final data will be stored in memory and transmitted to the printer. This will be evident as data is flashed on the display while being transmitted to printer or tape.

We can recall the stored data using the *7 Mode as follows:

Example 1f — RECALL FINAL DATA

Key in	ID Data	Description
*7	07:0XXX	*7 Mode--0XXX is data location number of data storage pointer
1	07:NNN	Where NNN is 10 less than 0XXX, i.e., go back 10 data storage locations
A	01:0001	Output Table 1 generated this data
A	02:0063	Julian Day (63)
A	03:1139	Time (11:39)
A	04:21.35	Average temperature (21.35° C)
A	05:27.21	Maximum temperature (27.21° C)
A	06:14.32	Minimum temperature (14.32° C)
		Advance for each new data point

Go back to the *0 Mode (press *0) to resume data logging.

Programming forms are provided to help code and document your application. Separate sheets are used for the input table and the three output tables. You don't have to use all three output tables or even all of the locations in a table as you can see from the example in Section 7. The Applications PROM Program List in Appendix C shows which numbers to enter into the CR21. Complete programming information is found in the programming instructions of Section 4.

In addition to recalling stored data to the display, the CR21 MICROLOGGER can transmit data to external devices. These include the CR56 Printer, audio cassette tape recorder, and telephone modem for remote interrogation. Operating instructions for interfacing to each of these three devices are found in this manual.

Having finished your introduction to the CR21 MICROLOGGER, we welcome you to the world of microprocessor-based data acquisition in the field. Months of intensive research and design have gone into building what we feel is the finest piece of truly portable data acquisition equipment available. Please read this manual carefully and get to know your machine as best you can. The better you understand it, the better it will serve you.

Appendix D is a summarized Prompt Sheet which steps you through the operation and programming of the CR21 MICROLOGGER.

SECTION 2. SENSOR INPUT CONNECTIONS AND INSTALLATION

2.1 GROUND CONNECTIONS

The CR21 will accept seven analog inputs (Channels 1-7) and two pulse counting inputs (Channels 8 and 9). The inputs to the analog channels are labled H (high) and L (low analog common), while the inputs to the pulse counting channels are labled HI and "⏚" (ground). ANALOG COMMON IS +1 V WITH RESPECT TO THE CR21 GROUND. As shown in Figure 2-1, the CR21 analog inputs are single-ended with one wire on all analog sensors tied together at analog common. Because of this, sensors must be used correctly to avoid ground loops and subsequent measurement errors. The sensors must not be electrically connected to anything except at the inputs to the CR21. This means that soil temperature probes must be electrically insulated, soil moisture blocks must have blocking capacitors, and grounded shields must not touch the sensor leads.

For purposes of signal integrity and lightning protection (Section 2-7), the CR21 ground (⏚) and sensor lead shields should be tied to earth ground near the CR21. If the Model 021 Fiberglass Enclosure is used, a ground busbar is available to facilitate this hookup (Figure 2-2). When the Model 021 is used, the busbar is connected to a CR21 ground (⏚) through the aluminum case. The existence of a conductive path should be verified with an ohm meter and if necessary a connector wire should be placed between the busbar and CR21 ground (⏚). Connect the sensor shields to the busbar, tie the busbar to the tripod with 10 to 14 awg wire, and if the tripod does not have a good electrical connection to earth ground, connect it to a ground stake with heavy wire.

EXTERNAL SENSOR POWER SUPPLIES

The key point in using external power supplies to activate sensors is to avoid dual earth grounds where both the CR21 and the sensor, through the external supply, are tied separately to earth ground. If a DC supply (external battery) is used, allow the power supply to float and ground the CR21 as shown in Figure 2-3. Where sensor outputs are referenced to earth ground through the power supply, the scheme shown in Figure 2-3 will not work. This occurs frequently where AC power is used to supply the sensor and the sensor outputs are not isolated from the AC earth

ground. In such cases no connection should be made to the L inputs because they are 1 V above CR21 ground and will be forced to ground through the sensor. The correct connections for this situation are shown in Figure 2-4.

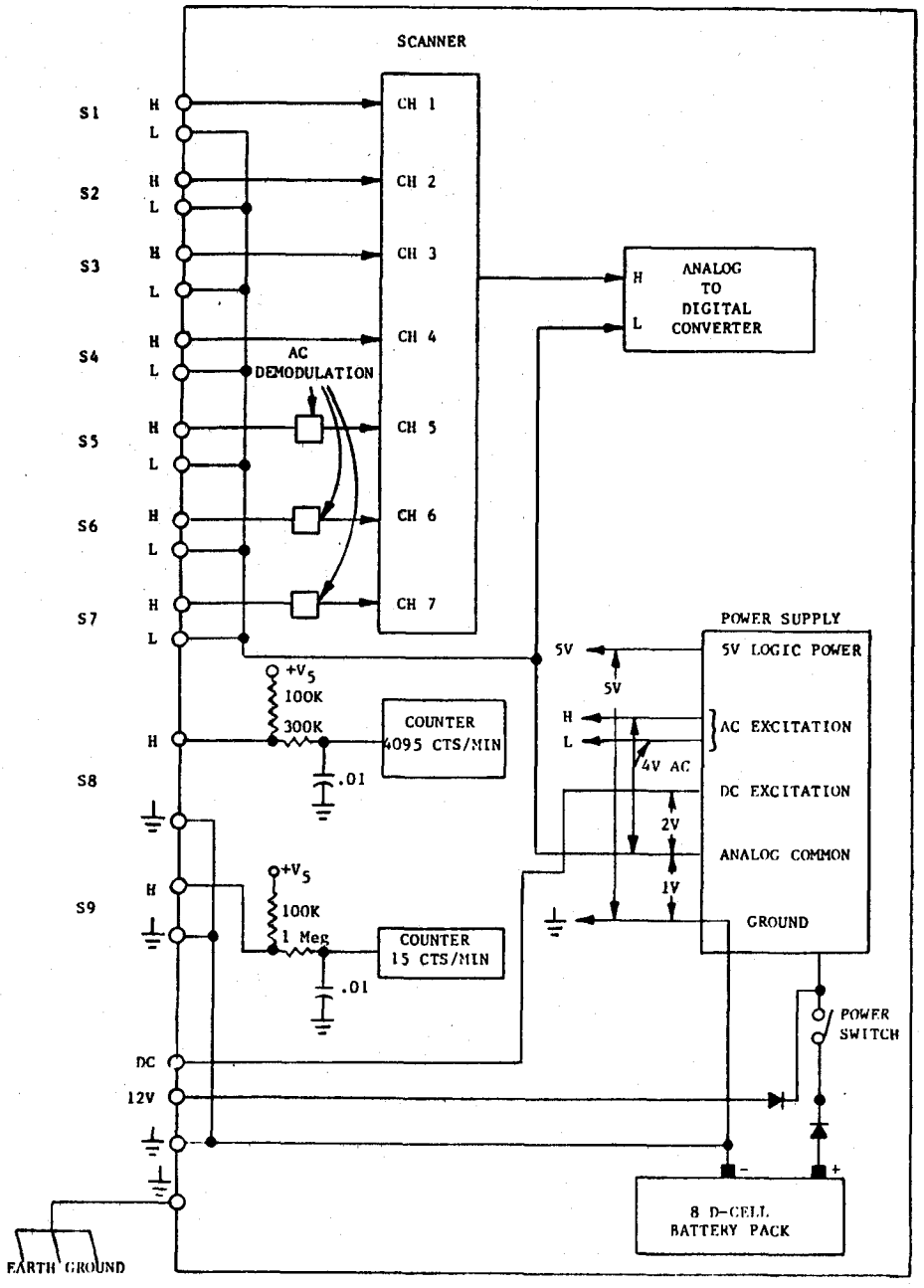

Figure 2-1 CR21 Block Diagram.

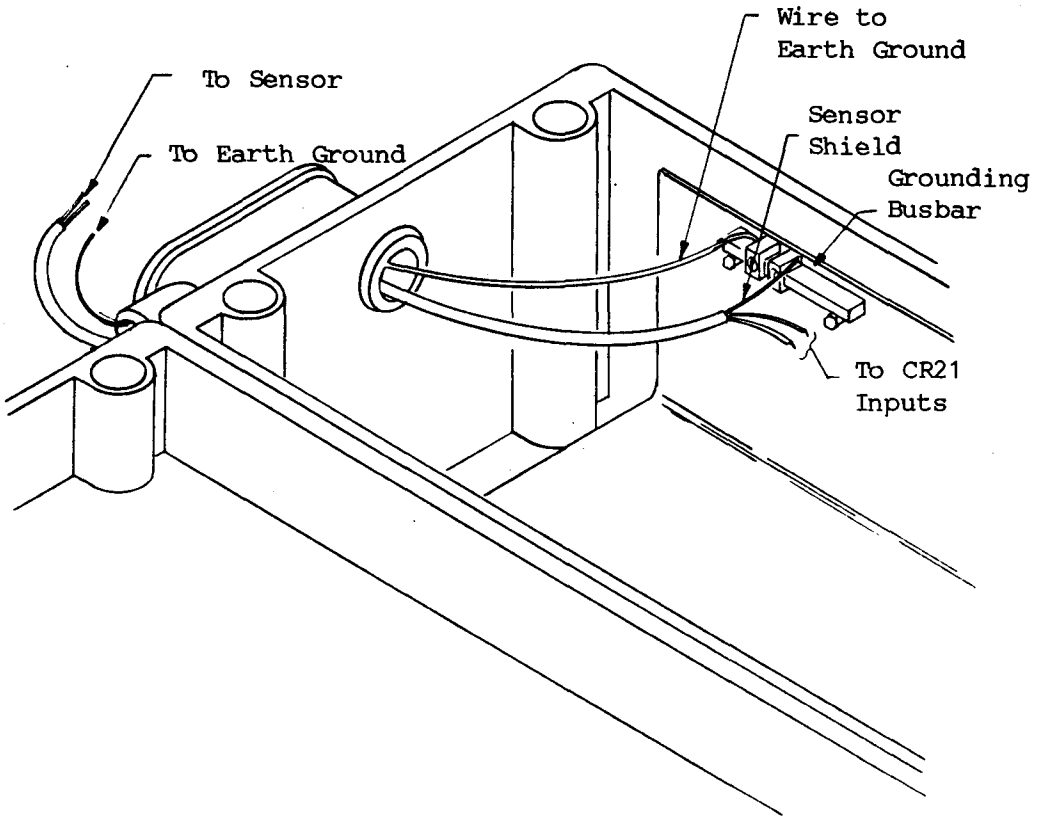

Figure 2-2 Model 021 Fiberglass Enclosure with grounding busbar.

The correct method uses a resistive voltage divider and the CR21 +5 V supply to establish a sensor input voltage above 1 V which can be referenced to the CR21 ground (⏚). The divider network compresses the signal range to 1-3 V which is read by the CR21 as 0-2 V when the sensor is connected to CR21 ground (⏚) instead of the L input.

The proper resistor values for Figure 2-4 are given for two sensor output ranges:

Sensor Range	R1	R2	R3	CR21 Input
0- 5 V	49.9 k 1%	24.9 k 1%	24.9 k 1%	1-3 V
0-10 V	150.0 k 1%	150.0 k 1%	49.9 k 1%	1-3 V

NOTE that the CR21 and all AC power supplies (in the case of multiple sensors) are tied to earth ground at a common point; usually the AC power outlet. Multiple AC supplies should use the same power outlet point!

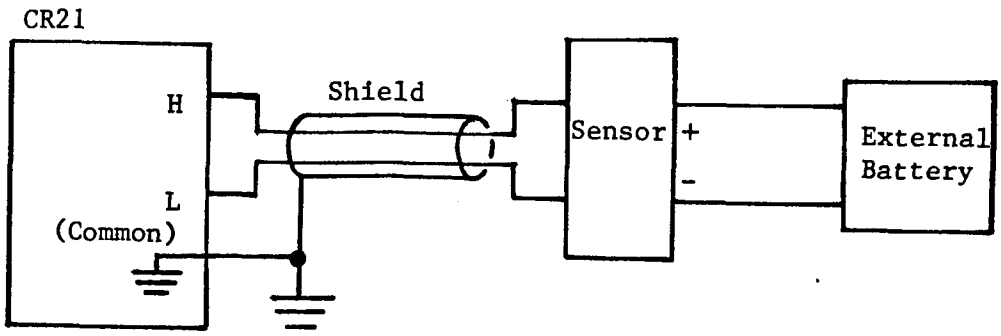

Figure 2-3 Floating external DC supply.

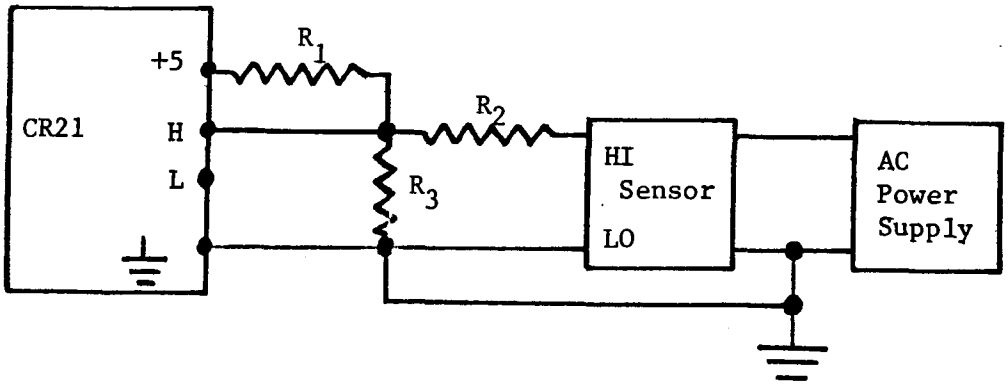

Figure 2-4 Resistive Voltage Divider and Range Translator where sensor output is referenced to earth ground through AC power supply.

2.2 VOLTS AND MILLIVOLTS

Channels 1-7 accept DC voltages from -.2 V to +2.5 V (with respect to analog common) with 1 mV resolution and DC millivolt signals from -2 mV to +25 mV with 5 µV resolution. Volt level signals are integrated for 100 ms while millivolt level signals are integrated for 200 ms. The integration time and amplifier gain are controlled by the selected input program. Automatic zero offset is done in software, resulting in negligible offset drift if the sensor resistance is below 500 k on the volt range and below 5 k on the millivolt range.

The two input voltage ranges were chosen to match most environmental sensors. Some ranges of input voltages may need to be attenuated so that the millivolt range can be used for better resolution. For example, a sensor with 50 mV full-scale output is too high for the millivolt range but too low for good

resolution on the volt range. Use a two-resistor voltage divider to lower the 50 mV signal to 25 mV maximum. Three voltage input configurations are shown in Figure 2-5.

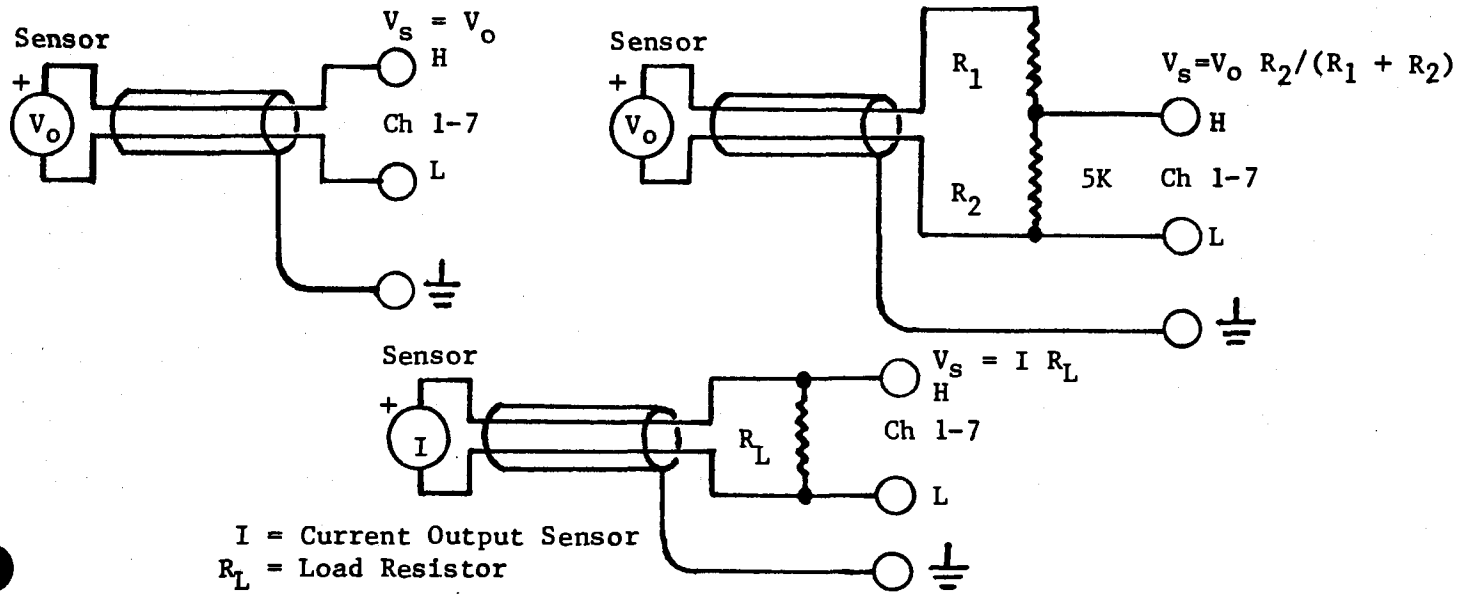

Figure 2-5 Measuring volts or millivolts.

2.3 DC EXCITATION

Resistive sensors (e.g., thermistors or wind direction sensors) need DC voltage excitation in order to generate a voltage output that the CR21 can read. The three terminals on the MICROLOGGER marked "DC" output a precision 2 V (with respect to analog common), excitation voltage (3 mA maximum) under control of various input programs. Typical wiring for this type of sensor is shown in Figure 2-6.

The resistor (R1) may or may not be required. Sometimes it may be used to limit the current drain on the DC excitation supply which must not exceed 3 mA, for example, a wind vane with a 360 degree potentiometer that shorts as it passes zero.

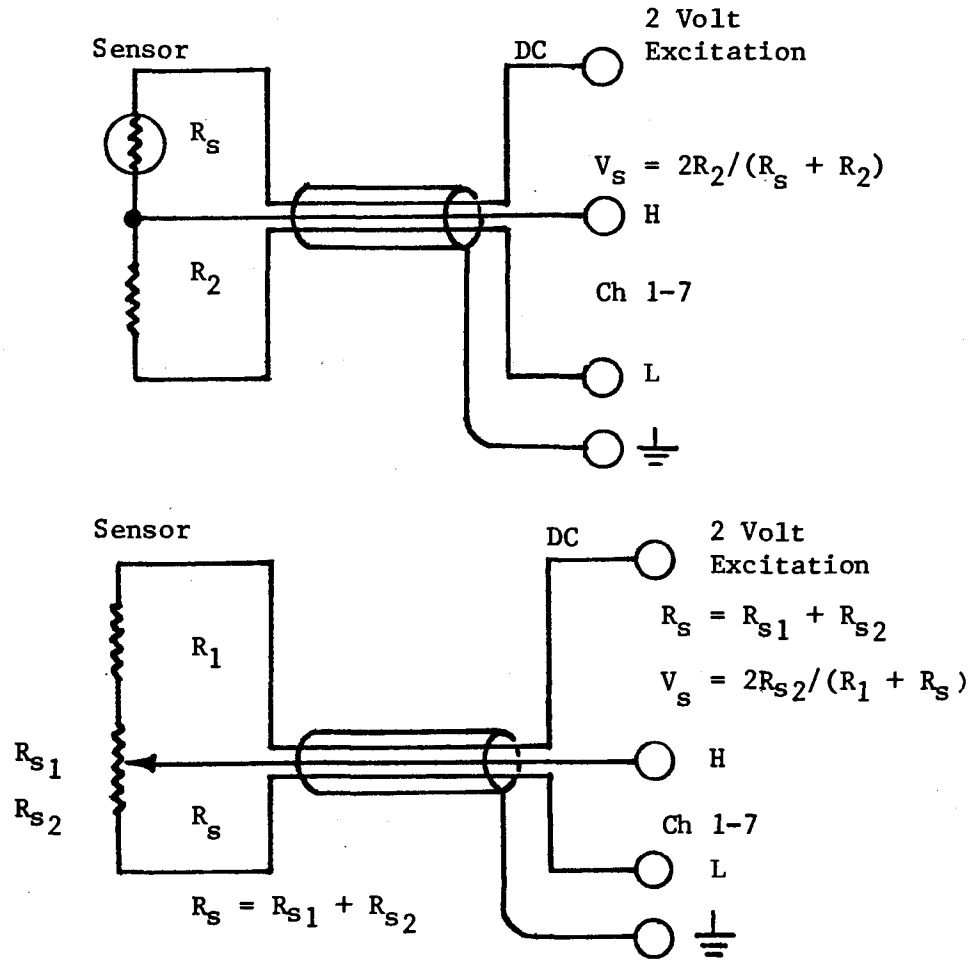

Figure 2-6 Measuring Resistive Sensors with DC Excitation.

2.4 AC EXCITATION

Channels 5, 6, and 7 can be used with AC excited sensors (e.g. electrochemical RH sensors, leaf wetness sensors, and soil moisture blocks). The AC,H and AC,L terminals on the CR21 output a 700 Hz, 4 V square wave. Channels 5, 6, and 7 have an internal demodulator that converts the AC sensor output back to DC. Lead wire capacitance errors are eliminated by a special circuit. The maximum length of lead wire that can be used depends on the sensor resistance. The higher the sensor resistance, the shorter the wires must be. Typically, lead lengths up to 75 feet can be used. Each case varies, however, and you can add longer leads if you test the results.

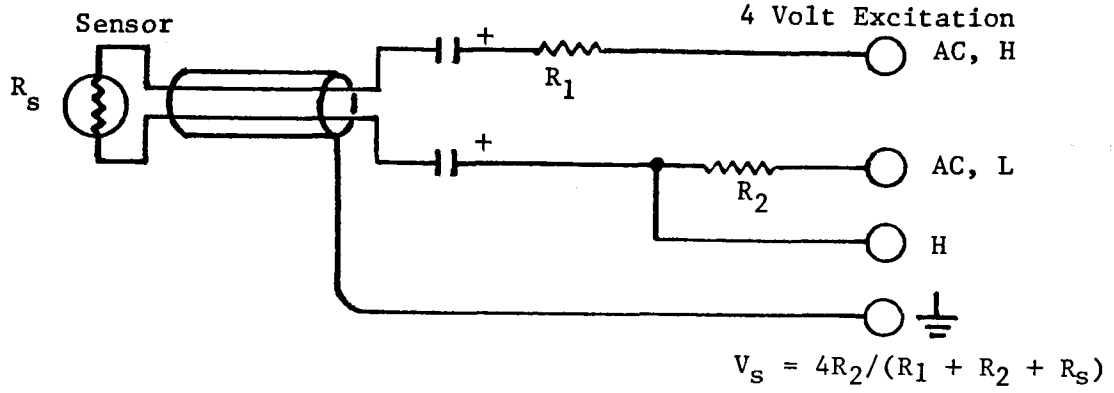

Figure 2-7 Measuring Resistive Sensors with AC Excitation (blocking capacitors may be eliminated if sensor is electrically isolated).

The 4 V AC drive appears as a 4 V DC drive to the CR21 after demodulation. Since the full-scale voltage input must be less than 2.5 V, the external resistors used with the sensor must be selected to keep the output signal below this level. Usually, two external resistors are required to shape the sensor output and keep the current drain on the AC drive less than 0.5 mA (minimum of 10 k ohms required). If sensor resistance is lower than this, the accuracy of the reading will be degraded.

If the sensor must be in electrical contact with the earth (e.g. soil moisture blocks), two capacitors must be used to prevent polarization. In most cases, 10 µFd tantalum capacitors are suitable.

2.5 PULSE COUNTS

Channels 8 and 9 count switch closures and voltage pulses. The minimum pulse width which the CR21 can detect is 3.3 ms for Channel 8 and 10 ms for Channel 9. For a 50 per cent duty cycle, this implies a maximum frequency response of 150 Hz for Channel 8 and 50 Hz for Channel 9. However, since the input counters are zeroed only on the input scan, sensors must be used which do not overrange the counters during the scan interval. The maximum count is 4095 for Channel 8 and 15 for Channel 9. A voltage pulse must rise above 3.5 V then drop below 1.5 V to be detected. Pulse amplitudes up to 12 V can be applied to these inputs. Normally, an anemometer is used with Channel 8 and a raingage with Channel 9. Figure 2-8 shows the pulse counting connection.

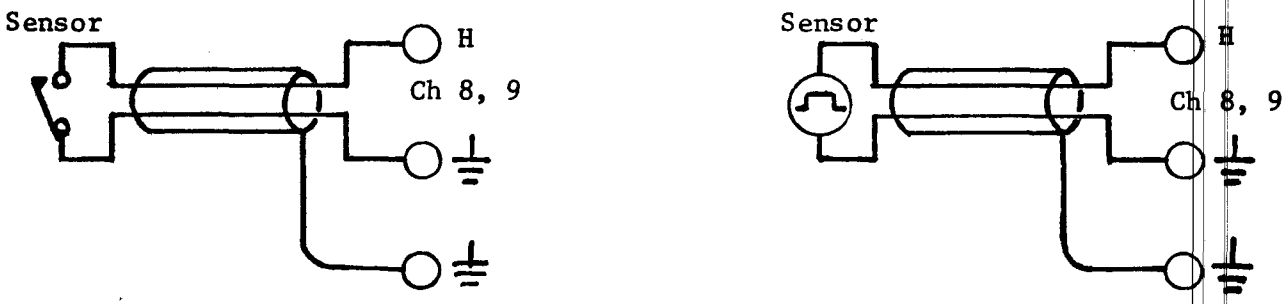

Figure 2-8 Pulse Counting Connection.

2.6 PROTECTION FROM THE ENVIRONMENT

The CR21 is not hermetically sealed. It is shipped with two packets of dessicant located by the batteries that should keep the interior components dry between battery changes. A dry, one-half unit package weighs approximately 19 gms and will absorb a maximum of 6 gms of water at 40 per cent relative humidity and 11 gms at 80 per cent. The dessicant can be reactivated by placing it in an oven at 250° F for 16 hours (dessicant only, not the CR21).

CSI manufactures the Model 021 Environmental Enclosure made of fiberglass to protect the CR21 outdoors. It provides a weather-tight housing that can hold both the CR21 and a cassette recorder. Figure 2-9 shows how the CR21 and a cassette recorder mount in the enclosure.

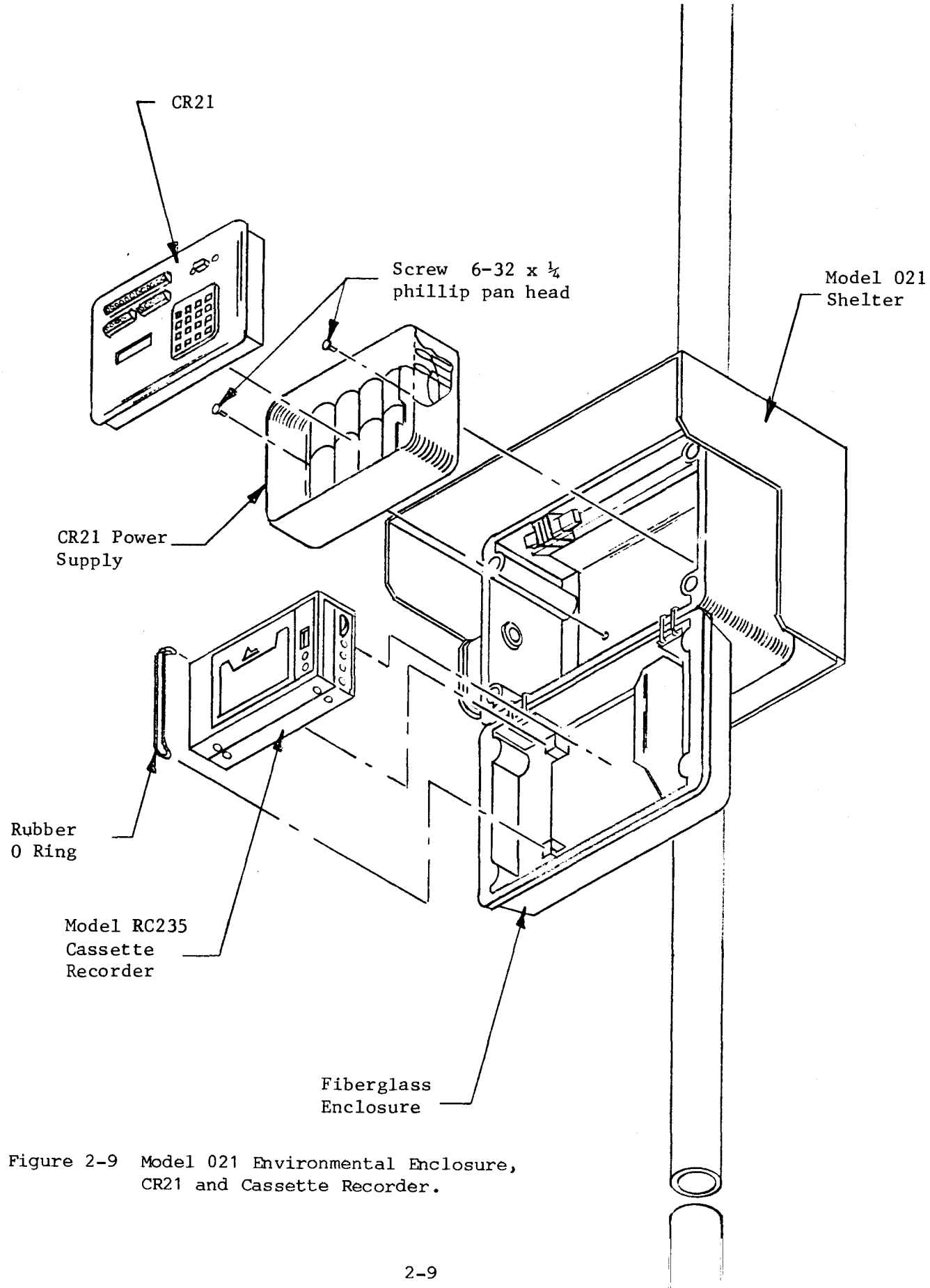

Figure 2-9 Model 021 Environmental Enclosure, CR21 and Cassette Recorder.

2.7 LIGHTNING PROTECTION

Primary lightning strikes are those where the lightning hits the data logger or sensors. Effective protection against primary strikes cannot be guaranteed, but a good connection between the tripod or shelter and earth ground is a minimum requirement.

Secondary lightning strikes occur when the lightning strikes somewhere near the sensor lead wires and induces a voltage in the wires. This type of strike occurs more often than a primary strike. Spark gaps can be used to clamp these voltage surges to earth ground.

The CR21 was designed to operate near its sensors. As the length of sensor lead wire increases, the probability of damage due to primary and secondary lightning strikes increases. The input channels have sufficient transient protection for most installations where the sensors are within 15 feet of the CR21. When sensors are used with long lead wires or in an area of heavy thunderstorm occurrence, external lightning suppressors (spark gaps) should be installed. They are inexpensve and effective.

Figure 2-10 shows how to connect spark gaps to the sensor lead wires. When using expensive sensors, it is also advisable to place a spark gap near the sensor. One side of the spark gap is connected to the wire to be protected and the other side to earth ground. When lightning strikes nearby, a high voltage is induced in the sensor lead wire. If this voltage rises above 100 V, the spark gap will change from nonconductive to conductive shorting the induced voltage to earth ground. When the surge has dissipated, the spark gap will go nonconductive again. The spark gap is not harmed in this process.

Spark gaps are available from the following:

Joslyn Electronic Systems
6868 Cartona Drive
P.O. Box 817
Goleta, CA 93017
(805) 968-3551
Model H-3, P/N 2022-12

Siemens
8700 E. Thomas
Scottsdale, AZ 85232
Model B1-C145

Campbell Scientific, Inc.
P.O. Box 551
815 West 1800 North
Logan, UT 84321
(801) 753-2342
Telex: 453058

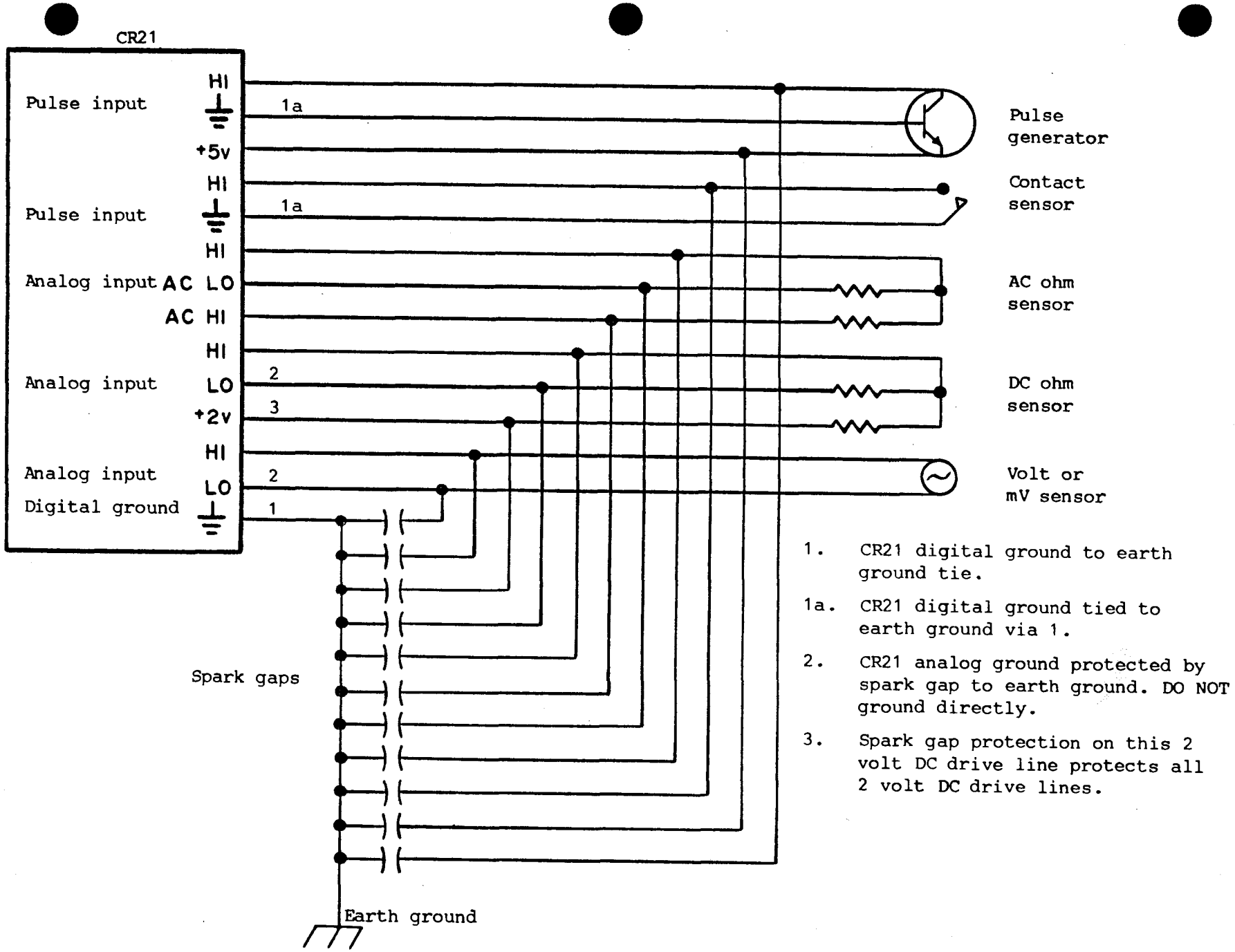

Figure 2-10 CR21 spark gap lightning protection for long sensor lead configurations

2.8 SUMMARY OF CR21 SPECIFICATIONS

GENERAL: User programmable processing data logger with auto ranging and full floating point math capability.

INPUT SIGNAL CONDITIONING PROGRAMS: Provide signal conditioning for volts, millivolts, DC resistance, AC resistance, thermistor linearization, and RH sensor linearization; multiplier and offset programmed for each channel.

DATA PROCESSING PROGRAMS: Standard output processing available includes sampling, averaging, summing, maximum, minimum, event recording, histograms, and more.

INTERNAL DATA STORAGE: 608 locations for processed data points, 64 intermediate storage locations for processing, and 9 locations for sensor readings.

SENSOR SCAN INTERVAL: Once per minute or once per 10 seconds as determined by choice of system PROM.

FINAL DATA STORAGE INTERVALS: Up to 3 intervals possible, each user programmable from 1 minute to 24 hours.

INPUT CHANNELS: 9 total, 7 analog, 2 pulse counting. Of the 7 analog, Channels 5, 6, and 7 can read AC resistance.

DIGITAL INPUT CHANNELS: Two inputs, 5 V CMOS levels--available for special applications.

DIGITAL OUTPUT CHANNELS: 4 CMOS outputs.

AMPLIFIER ACCURACY:
0 to 40° C Temperature Range: +/- .2% of reading or 2 times the resolution, whichever is greater. -25 to +50° C Temperature Range: +/- .5% of reading or 2 times the resolution, whichever is greater.

RESOLUTION: +/- 5 µV on millivolt range and +/- 1 mV on volt range.

ON-LINE DATA STORAGE MEDIA: CMOS RAM, Printer, Cassette.

DATA RETRIEVAL FROM RAM: Cassette, Display, Telephone Dial-up Telemetry and CR56 Printer.

REAL TIME CLOCK: +/- 3 minutes per month

DISPLAY: 6 digit LCD.

POWER: 8 alkaline D cells, typical life 5000 hours.

ENVIRONMENT: -25 to + 50° C, 0 to 95% RH, noncondensing.

SIZE AND WEIGHT: 2.7" x 5.7" x 8.2", 5 lbs.

SECTION 3. CONTROL INPUTS AND OUTPUTS

3.1 GENERAL

There are two binary inputs and four control outputs on the panel of the CR21. The inputs are labled IN 1 and IN 2. Each has an "H" terminal and a ground (⏚) terminal associated with it. The outputs are labled OUT 1, 2, 3, and 4.

These digital inputs and outputs are used with special input and output programs for controlling external devices. Typical programs include the Timed Port Turn On Program (e.g. to turn on a wet-dry bulb fan) and the Set Point Controller Program used to activate and deactivate the output ports based on the value of a sensor input.

The inputs are activated by a positive true (high going) 5 V signal referenced to ground. The outputs deliver a 5 V output with 5 k source resistance. External buffers may be necessary to increase the output current to a useful level.

The 5 V terminal on the CR21 panel can provide up to 100 mA for use with a buffered drive on the output ports. The CR21 battery life will be reduced if this current drain is longer than momentary. Figure 3-1 shows some typical connection schemes.

> CAUTION: SHORTING THE 5 V TERMINAL TO GROUND WILL ERASE ALL YOUR DATA.

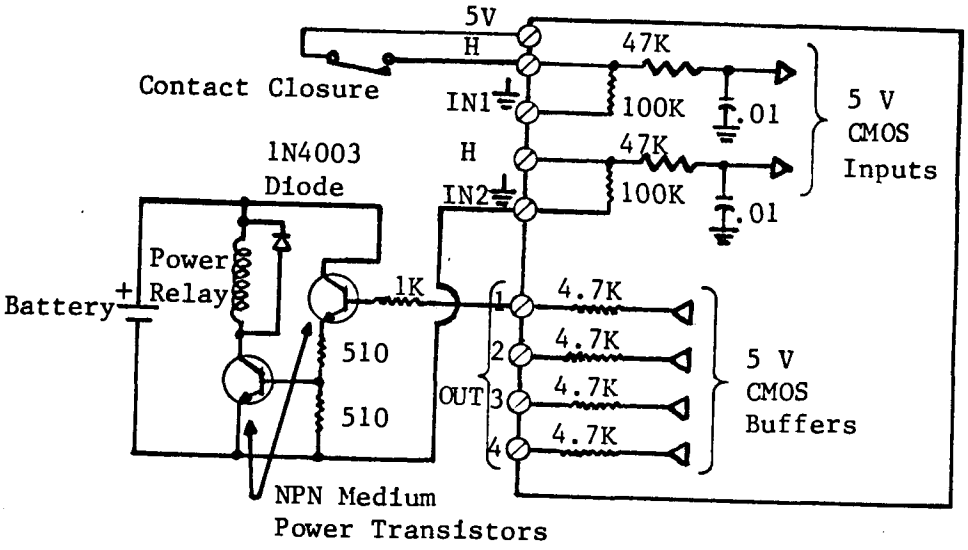

Figure 3-1 I/O Port Connections.

SECTION 4. PROGRAMMING THE CR21

4.1 OVERVIEW OF THE CR21 OPERATING SYSTEM

Figure 4-1 is a block diagram of the CR21 Operating System showing how the system functions. The *N's (N=0-9) above the block refer to control modes that the user accesses from the keyboard.

INPUT PROCESSING

The Input Processing Table, programmed through the *4 Mode, defines how each input channel is read and converted to engineering units (EU) once each minute (ten seconds in special CR21's). The user selects the programs from the Applications PROM Program List (Appendix C) and enters the program numbers using the keyboard. The user also enters a multiplier and offset with each input program for sensor scaling. The sensor readings, in engineering units, are stored in a temporary memory location (input storage) for use by the output processing programs.

OUTPUT PROCESSING

Three Output Processing Tables, programmed through the *1, *2, and *3 Modes, define output processing in the CR21. The user enters the output time interval in minutes and up to nine processing programs for each table that is used. The processing programs operate on the sensor input data and generate time-related data summaries (final data) at the output interval specified for that table. Sample, average, maximum, minimum, and histogram are examples of processing programs (see Appendix B for a description of the output processing programs).

If, for example, the average hourly temperature on Channel 1 is desired, the CR21 will use the Averaging Output Program to sum 60 one-minute readings into a temporary memory location (intermediate storage) and divide by 60 at the end of the hour to obtain the average, then output the average as final data. Any number of output programs can use the data from any or all of the input sensors.

Section 7 illustrates a sample data logging application with filled-in programming forms (available in pads from CSI).

Figure 4-1 THE CR21 OPERATING SYSTEM

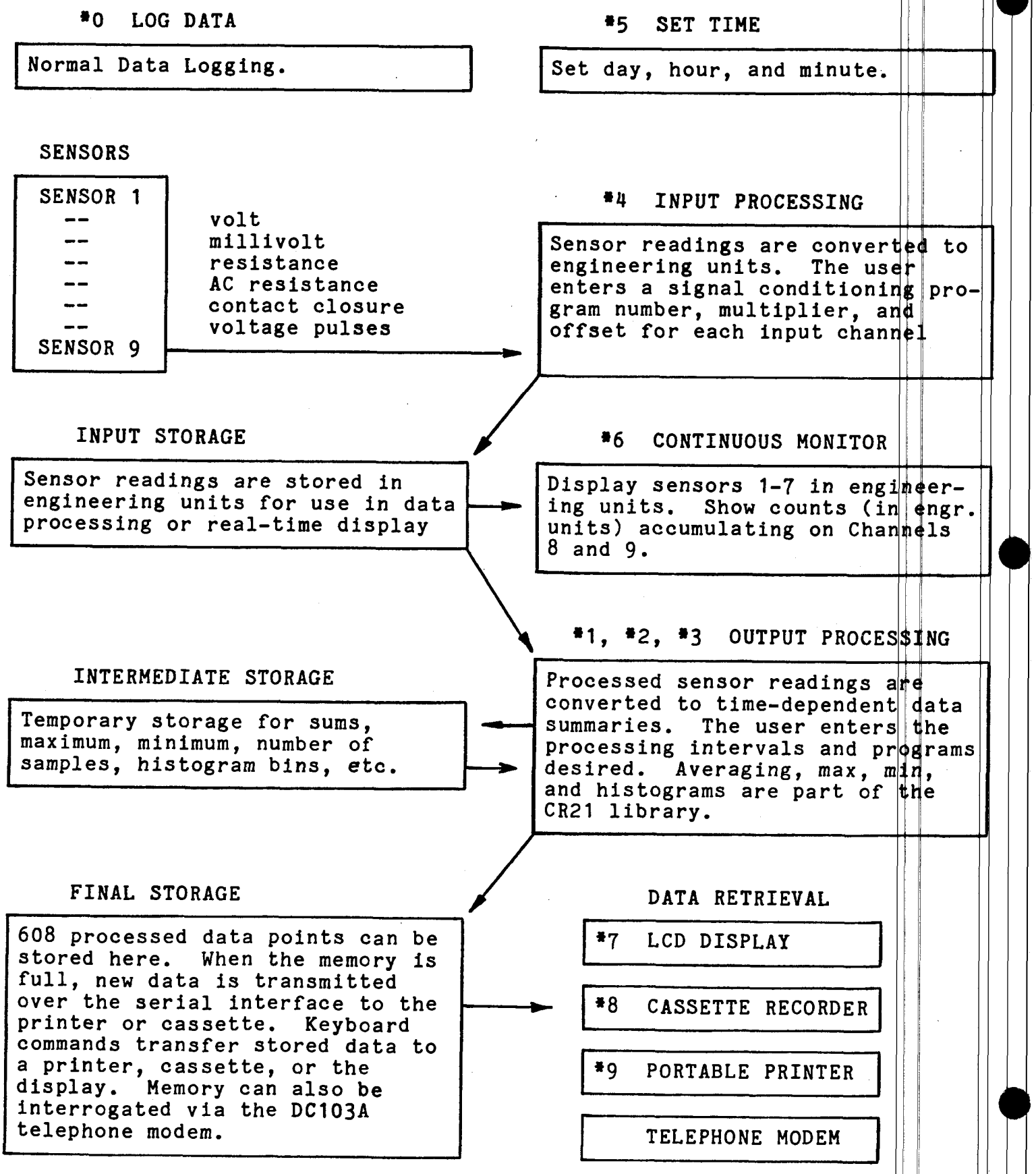

INTERMEDIATE STORAGE

There are 64 intermediate storage locations in the CR21. The number of locations in intermediate storage required by each output program is given in Appendix B. After completing the Output Table Coding Form, add up the total number of locations required by the output programs to make sure it does not exceed 64. Normally, this limit will only be exceeded when the Histogram Output Program is used.

FINAL STORAGE

The final storage area is separate from input storage and intermediate storage. Data is recorded in final storage only at the output intervals specified by the three output tables. The final data storage area has a capacity of 608 data points. When this memory is full, new data is written over the old. The final storage memory acts as a buffer to hold output data until the data can be transferred to a cassette, printer, telephone line, or the display.

PROGRAMMING AND DATA RETRIEVAL MODES

Table 4-1 TEN KEYBOARD CONTROL MODES

*0	Log Data
*1	Output Processing Table 1
*2	Output Processing Table 2
*3	Output Processing Table 3
*4	Input Processing Table
*5	Set day, hour, minute
*6	Monitor current sensor readings
*7	Display stored data
*8	Memory dump to cassette
*9	Memory dump to printer

To enter a keyboard control mode, press the * Key, wait for a display of 00:0000, then enter the number specifying the mode. Upon entering any mode (*1-*9) the mode number is displayed in the ID field (the first two digits on the display). In modes *1 through *6, the data field (last four digits) are blank, while for modes *7 through *9 the data field displays the current data storage pointer (DSP) location number. The DSP is explained in detail in Section 5.

Once a particular control mode is entered, the A Key is generally used to execute the control function, advance through program tables or data, or enter data. Key definitions are shown in Table 4-2.

Table 4-2 KEY DEFINITION SUMMARY

Key	Action
0-9	Enter numeric data
*	Enter a control mode
A	Advance through a program table or data, store displayed number, or execute a control program
B	Begin at the start of the active control mode
C	Change the sign of the number to be entered
D	Decimal point
#	Clear entry or abort memory dump

4.2 PROGRAMMING THE INPUT TABLE - *4 MODE

The input table is a list of programs and scaling numbers that the CR21 uses to condition, measure, and scale the electrical signals from each input. Since there are nine input channels on the CR21 MICROLOGGER, nine sets of entries can be keyed into the input table. If some channels are not used, zeros are keyed in for input program numbers on these channels.

Appendix A describes the input programs in your CR21. Some of the programs are for use with a specific sensor type. Other programs will work with any linear sensor having the proper type of output. Most linear sensors will use Input Program 1, 2, or 3.

The input table is arranged to accept three entries per channel. As control is advanced (A key) for each entry in the Input Table (*4 Mode), the first digit in the ID field displays the channel number and the second displays the entry number (input program number, multiplier, or offset). Table 4-3 describes the entries. The input program number is selected from Appendix A or C. The multiplier is entered as engineering units (EU) per input unit (IU) (e.g. degress C per mV), and the offset is entered in engineering units (EU). The multiplier and offset are determined by the sensor calibration, the sensor connections (Section 2), and the desired engineering units. In selecting engineering units, be sure to consider the usage of the input data by the output programs.

Table 4-3 INPUT TABLE ENTRY FORMAT

11:	First entry for Channel 1 (input program number)
12:	Second entry for Channel 1 (multiplier=EU/IU)
13:	Third entry for Channel 1 (offset=EU)

Any linear sensor can be programmed to provide output in engineering units (EU) according to the relationship

$$y = Mx + B$$

where y is the processed input data (EU), M is the user-entered multiplier (EU/IU), x is the raw input data (IU), and B is the user-entered offset.

Linearizing programs for some common non-linear sensors (e.g. Model 101 Temperature Probe and Model 201 Relative Humidity Probe) are included in the input programs (Appendix A). The user can modify the linearized output of these input programs by entering a multiplier and offset in the input table, but the basic nature of the linearizing cannot be altered from the keyboard.

An example of a special input form is found in Section 7. Note that the input table entries (e.g. the numbers you are to key into the CR21) are prefixed with the channel number, entry number, and a colon. The other pieces of information are for your reference only and are used to arrive at multiplier and offset factors. Note that the type of sensor each channel is capable of accomodating is listed on the Input Table Coding Form (e.g. V, mV, DC resistance).

After carefully filling out the Input Table Coding Form, the table entries can be keyed into the CR21. The key sequence *4 A will leave the CR21 ready to accept the input program number for Channel 1 with "11:" showing on the ID side of the display.

If only one channel needs to be modified, you can jump directly to that table location. For example, if Channel 6 needed a change in its input table entry, you would key in *4 6 A. The CR21 would now be waiting for a program number for Channel 6 with "61:" displayed in the ID field.

To check the contents of the input table, go to the *4 Mode and advance through the input table using the A Key. After programming the input table, you should check the sensors using the *6 Mode.

One "quirk" occurs when you key in a number like 0.0146 as a multiplier in an input table. When the number is recalled in

reviewing the input table, it will appear as 0.014. Don't worry, the number is still in the machine as 0.0146, it just cannot be displayed with all four digits on the right of the decimal. A software interaction between final data storage requirements and keyed-in numbers is responsible for this.

CR21 RANGE -VS- RESOLUTION

The maximum number the CR21 can output as final data is 6999 while the maximum number of digits that can be entered as a multiplier is four. Occassionally, a situation may arise where the user's desired output is limited by these constraints. The following is an example of this and contains several points to be aware of when doing the input programming.

Assume a pyranometer with a calibration of 7.08 mV/kW/m² is being monitored and the user desires a 12-hour total energy density output (kJ/m²). There are several approaches, the simplest being to set M, the multiplier, such that the input scan will yield power density (kW/m²) and use the Average Output Program. The final output would be the average power density over the 12-hour output interval.

For this case, the multiplier is

$$M = 1 \text{ kW/m}^2 / 7.08 \text{ mV} = .1412 \text{ kW/m}^2/\text{mV}$$

and the final output is

$$\bar{y} = \frac{1}{N} \sum_{i=1}^{N} y_i$$

where N is the number of input scans in the 12-hour interval and the y_i are the processed input data points.

The user would then multiply the final answer by the number of seconds in 12 hours to obtain the total energy density (kJ/m²) over the time period. For the purpose of this example, let's say that for every input scan x_i = 7.08 mV. The final output would be 1 kW/m² and the total energy density would be

$$(1 \text{ kW/m}^2)\ (43{,}200 \text{ s}) = 43.20 \text{ MJ/m}^2$$

If the Totalize Output Program is used to sum energy density directly, two points of consideration arise. First, whenever rate data is summed (in this case energy/time), the multiplier must reflect the input scan interval, in our case one minute. Second, the multiplier must be such that the total will not overrange the CR21.

For this situation, the multiplier is

$$M = (1\ kW/m^2/7.08\ mV)(60\ sec) = 8.475\ kJ/m^2/mV$$

However, if every input scan voltage were 7.08 mV, the CR21 would overrange in 116 minutes.

Time before overrange = maximum CR21 output number/estimated yi

$$\text{or} \qquad 6999/((8.475)(7.08)) = 116$$

The next approach might be to output the final sum in units of MJ/m^2. Now, however, the multiplier is

$$M = .008475$$

and the restriction of only four multiplier digits causes a resolution error of about 0.5 per cent. While several solutions exist, such as outputting $(kJ/m^2)(10)$ or living with the 0.5 per cent error (that's more accurate than the sensor), there is another approach.

Using the Average Output Program, as in the first approach, make the CR21 multiply each input scan by the output interval (43,200 s) instead of doing it yourself after the final data is retrieved. In this case, the multiplier would be

$$M = (10^{-3}\ MJ/m^2s/7.08\ mV)(43,200\ s)$$
$$= 6.102\ MJ/m^2/mV$$

If every input scan voltage were 7.08 mV, the final output would be 43.20 MJ/m^2, the same value as obtained previously.

Note, however, that the value displayed when visually monitoring the sensor output in the *6 Mode will be $((MJ/m^2)/last\ min)$ (43,200 s).

4.3 MONITORING THE SENSORS - *6 MODE

After completing the input table entries using the *4 Mode, the sensor inputs can be monitored on the LCD display using the *6 Mode. The sequence *6 N A where N is Channel Number 0-9, will display the Nth Channel (Channel 0 displays battery voltage). It usually takes one to three seconds for the channel value to appear after asserting the key sequence. The display shows the channel number in the ID field, then a colon, followed by the channel value after input processing as specified in the

input table (Section 4.2). To view another channel, simply key in the channel number. Do not press the A Key again. To leave the *6 Mode, press the * Key and wait for 00:0000 to appear on the display.

Channels 8 and 9 reset the pulse counts to zero each input scan. When monitoring these channels, enter the *0 Mode and remain there for at least one scan before entering the *6 Mode. If the *0 Mode is not entered first, Channels 8 and 9 will not reset to zero, but will continually count up until the maximum count is reached (4095 for Channel 8 and 15 for Channel 9).

One display limitation is that 4-digit numbers between 6999 and 9999 cannot be displayed. This is caused by constraints placed on memory size in final data storage and will be particularly noticeable while watching room temperature in degrees Fahrenheit. The temperature will rise to 69.99° F, suddenly change to 70.0° F, and stay with three digits until 99.9° F is passed after which 4 digits are displayed again. Internal calculations are done in full floating point arithmetic, so the limit on displayed numbers will not affect any calculations.

4.4 PROGRAMMING THE OUTPUT TABLES - *1, *2, and *3 MODES

An output table is a list of output program numbers and associated parameters (see Appendix B or C), that the CR21 uses to process the input data for final data output and storage in memory (e.g. averages, integrals, histograms, maximums, and minimums). The three output tables are programmed using the *1, *2, and *3 Modes, respectively. Each output table has its own user-entered output interval and a maximum of nine output processing tasks.

The first number entered in any output table is the data output interval in units of minutes. Press *1 to enter the control mode for programming Output Table 1. The display will appear as follows:

Key in	ID Data	
*1	01:bbbb	(b=blank)
A	03:0000	03--Enter output time interval

Key in the desired data output interval, then press the A Key again. The output interval is entered as the number of minutes to process input scans before the final data is recorded. For example, a one-hour output interval would be programmed as 60.

If the output interval for a table is set at zero, that output table will not be used. This feature allows you to leave all three output tables programmed, enabling only the one you wish at the moment.

The maximum EXECUTABLE OUTPUT INTERVAL IS ONE DAY, I.E., 1440 MINUTES. Any interval longer than this will inhibit execution of the output table except where Time of Event or Conditional Scan programs are used. The output intervals are automatically synchronized to the even hour if the interval is less than 60 minutes or to midnight for intervals greater than 60 minutes. Intervals which do not divide evenly into an hour or 24 hour period cause an odd interval output at the end of an hour or day, respectively. For example, a 17 minute output interval would yield output at 17, 34, and 51 minutes past the hour followed by an output on the hour which covered a 9 minute interval.

After the A Key is pressed to store the output interval, the display will show 11:0000 and you are ready to program the first output processing task. Each task consists of three entries as shown in Table 4-4. The first number in the ID field identifies the processing task (1-9), and the second number identifies the entry.

Table 4-4 OUTPUT TABLE ENTRY FORMAT

ID Data	Description
11:	Output Program Number
12:	Parameter Number 1
13:	Parameter Number 2

The first entry made is the output program number (see Appendix B or C). Parameter number 1 is usually the input channel providing data for the output program. Parameter number 2 is an optional output program modifier. It varies with the output program and may be a second channel number or other modifier. A detailed description of the output program and the associated parameters is contained in Appendix B. As each parameter of an output table is keyed in, the A Key enters the number into memory and advances the display pointer to the next entry. OUTPUT TABLE ENTRIES ARE RESTRICTED TO POSITIVE INTEGERS. Minus signs and decimal points are ignored by the CR21 if entered into the output tables.

To help document the output table and the output data arrays, an Output Table Coding Form is provided (see Section 7). Each block on the form represents one complete output program entry. On the righthand side of the form is a heading "Output ID Number." Each data point in the output data array is identified by an output ID

number. For Output Table 1, the first 3 ID numbers are reserved for output table ID, Julian Day, and time, making the fourth ID number the first data point. Julian Day and time are omitted from Output Tables 2 and 3. In these tables, the data point begins at Output ID Number 2. Note that some output programs generate several output data values (e.g. the Histogram Output Program).

Once the output tables are entered, you should review the contents using the key sequence *1 A A A etc. When this is finished you should be ready to set the clock and log data.

4.5 SETTING THE CLOCK - *5 MODE

To set the clock, key in *5 A. The information to be keyed in for each identifier is as shown in Table 4-5.

Table 4-5 CLOCK PARAMETERS

ID Data	Description
91:	Julian Day
92:	Hour
93:	Minute

The number representing Julian day is NOT reset at the end of the year and can be any number up to the "6999" limit if you care to use it to represent something other than Julian day. It is incremented exactly one minute after midnight so that data representing the time interval ending at midnight will be recorded at midnight with the prior to midnight date.

The displayed time will be 2359 for one minute before midnight, 2400 at midnight, and 0001 for one minute after midnight. Although hours and minutes are displayed as a single 4 digit number, when setting time in the *5 mode, hours and minutes are independent 2 digit entries.

When the "A" key is pressed to enter minutes, an internal seconds register is reset to zero allowing the system to be synchronized to within 10 seconds of the actual time.

Modification of any time information in the *5 mode can be done while logging data without affecting the logging operation other than the resulting shorter or longer output interval occurring when time was modified.

4.6 LOGGING DATA - *0 MODE

After the input table, output tables, and clock have been programmed, the CR21 is ready to log data. Press *0 and the display will show 99:HHMM. The 99 indicates that the CR21 is in the data logging mode, and the time of day is HH hours and MM minutes. Each minute the displayed time will be updated just as if the display were a digital clock.

Upon entering the *0 Mode, after programming the CR21 tables the first data will be processed over a short output interval. As described in Section 4.4, the output intervals are synchronized to either the even hour or midnight. The first data array which is output will include data from the time *0 is entered until the end of the first synchronized output interval. From that point on, the data will represent complete output intervals, within the constraints described in Section 4.4.

Each time the CR21 scans the sensors, the "scanning colon" (XXXX:XX) lights up for the duration of the scan. The keyboard will not respond to commands during this time. At the end of each output interval programmed into Output Tables 1-3, processed data is stored in final memory. Immediately following this, the CR21 activates the "printer enable" line and transmits the same data via the serial I/O port. The display changes from showing time of day to showing the output data. Data transmitted to a printer flashes across the display at a rate of two data points per second. This occurs even if a printer is not connected to the CR21.

Data is transfered from final memory to cassette in 512 data point blocks. Transmission occurs at a rate of 100 data points per second and does not appear on the display. The keyboard is inoperative during these cassette and printer outputs.

Any time after the first scan has occurred, *1-*9 Modes can be re-entered without disturbing normal data logging, enabling you to monitor current sensor readings, check the input and output tables, reset the clock, or dump memory to the printer or cassette. The CR21 will interrupt and take another scan whenever necessary. If an output interval is reached while in a *1-*9 Mode, the output data array will be stored in memory, but will not be output to the serial I/O port until the *0 Mode is entered again.

NOTE: If, while reviewing the input table or output tables (*1-*4), you change any previous entry or add a new entry, the CR21 will immediately stop logging data and all intermediate storage will be re-initialized. Logging will resume when returning to the *0 mode but the data recorded at the next output time will only be representative of the time since re-entering the *0 mode.

Any output data arrays previously processed will still be in final storage and can be retrieved through a full memory dump described in Section 5.

To reduce battery drain, the CR21 should always be set to the *0 Mode when it is left unattended.

SECTION 5. DATA RETRIEVAL

5.1 FINAL DATA STORAGE

At the end of each output interval, an output data array is stored in the final data storage area which has a capacity of 608 data points. It can be visualized as a ring memory in which new data is written over the oldest data. Figure 5-1 is a representation of the final data storage area and the logic of data storage and retrieval.

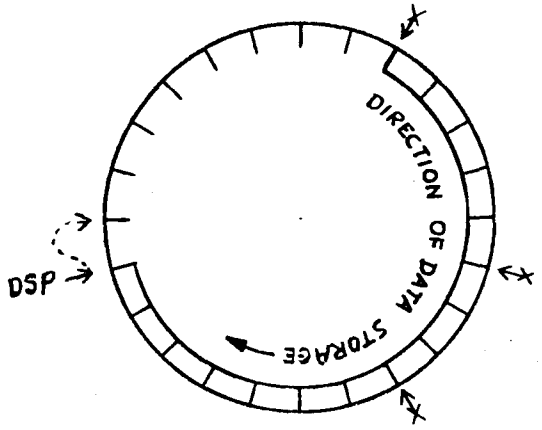

Figure 5-1 Final data storage area.

DSP is the data storage pointer used by the CR21 to tell where to store each new data point in the final data storage area. It advances to the next available memory location after each new value is stored. When it has gone around the complete memory and is pointing to the first data point stored, the new data point is written over the old.

Data is transmitted into the final storage in groups or final data arrays, each associated with one output table (*1, *2, or *3). A start of data array marker (X) is written into memory with the first data point of each array. This marker is used as an initial reference point from which to number the data points of each array when the data is recalled. All data is stored in the ring memory before it is transmitted to any external device.

A printer pointer, PPTR, is used to control the transmission of data to the printer. Data is transmitted to the printer each time an output array is stored in the final data storage area. After each data point is transmitted, PPTR is advanced until PPTR catches up to DSP at which time the printer enable line goes low.

Another pointer, called the tape pointer (TPTR) is used to read data from the memory as it is transmitted to the cassette port. The CR21 is programmed such that when the data storage pointer, DSP, is 512 locations ahead of the tape pointer, TPTR, the cassette relay in the CR21 is closed and data is transmitted starting at TPTR. TPTR advances until it catches up with DSP at which time the cassette relay opens.

A third memory read pointer, DPTR, is used to recall data to the display. Positioning of this pointer is controlled entirely from the keyboard.

The last memory read pointer, MPTR, is used for recalling stored data to be transmitted over a telecommunications interface. Its positioning is controlled by commands from the calling unit.

Every time a new entry is made in any of the *1 through *4 Modes, the read pointers are repositioned to the data storage pointer (DSP) location.

If external storage devices (cassette, printer) are not used on-site, the maximum time between site visitations must be figured to insure that no data in final memory is lost due to write-over. The number of data points per day can be computed by including 3 overhead points (output table ID, Julian Day, time) every output interval for Output Table 1 and 1 overhead point each (output table ID) for Output Tables 2 and 3. In addition, some margin must be given for any programs with intermittent output such as Time of Event, etc.

DATA FORMAT AND RESOLUTION.

During initial processing and intermediate data storage, the numbers are stored in a 4-byte floating point format. This gives a range of 10^{-18} to 10^{18} accurate to more than 7 decimal digits. The final data storage is limited to 16 bits per data point. Of these 16 bits, two are used for decimal point locaters and one is used for sign. One additional special bit configuration in the most significant byte is used as a data array marker. Thus, the largest number that can be represented is 7167 (XXX1101111111111), where the X characters are the sign and decimal locators. CSI rounds this number off, making 6999 the largest number the CR21 can store in final memory. The smallest number is 0.001. The decimal point shifts position whenever the 6999 digit pattern is passed.

The final data is transmitted to an output device with a two-digit ID number, polarity and a five-place data field (four digits and a decimal). When interpreting data, the user should be aware that the data resolution is better than is warranted by sensor accuracy and VCO resolution.

5.2 HARDWARE CONNECTIONS FOR DATA TRANSFER

Figure 5-2 shows the hardware that can be used to transfer data from the CR21.

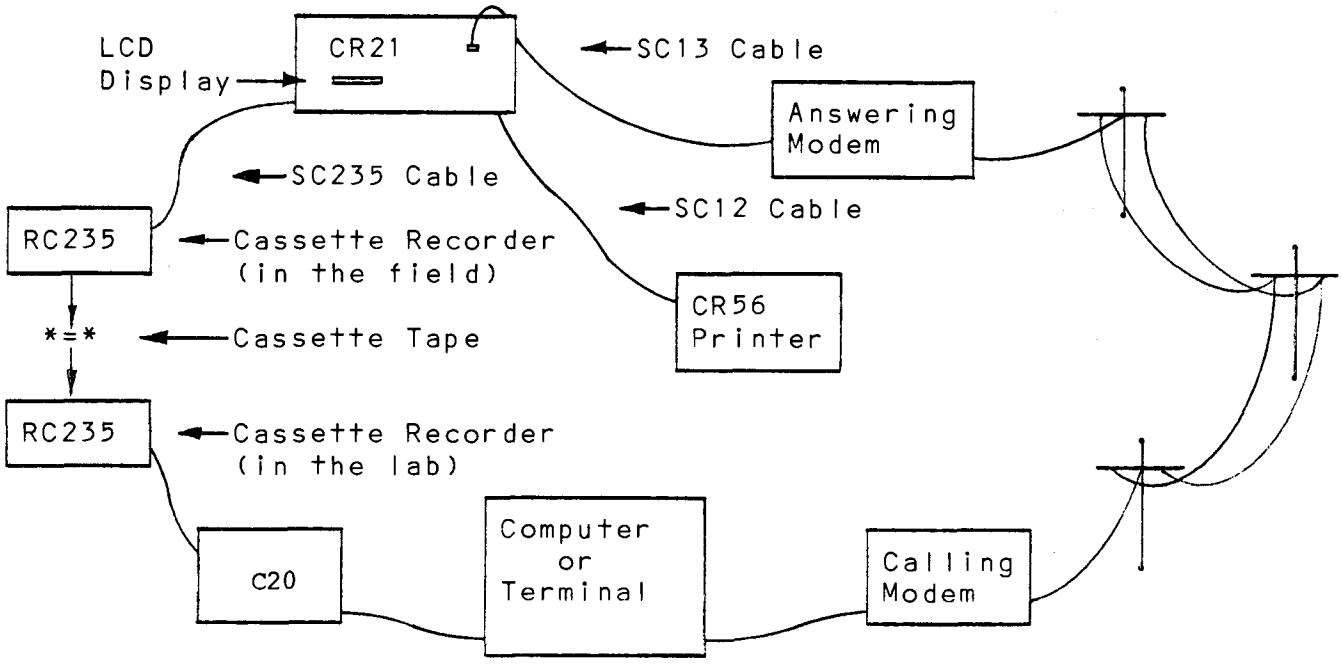

Figure 5-2 Data Retrieval Hardware.

All of these units connect to the CR21 through the 9-pin subminiature D-type socket connector on the panel. The pins are numbered from left to right and front to rear so that pin 1 is on the front left and pin 9 is on the back right. The pin functions are as follows:

PIN FUNCTION

NOTE Logic high is 3 to 5 V
Logic low is 0 to 2 V

1 Output--5 V supply.

2 Ground.

3 Input--ring signal from the modem. Logic high on this line activates the CR21 which then sets line 5 to a high logic level to answer the phone.

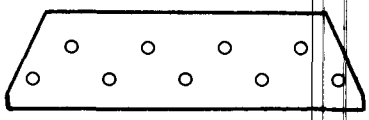

CR21 9-PIN SUB-MINIATURE D-TYPE SOCKET CONNECTOR

4 Input--serial data received by the CR21. Logic low marking, logic high spacing, standard asychronous ASCII, even parity, 300 baud.

5 Output--modem enable goes high to tell the modem to answer the phone.

6 Output--printer enable, logic high activates the CR56 Printer.

7 Relay contact closure side B. Normally open, closed to turn on the cassette recorder.

8 Relay contact closure side A for cassette.

9 Output--serial data transmitted by the CR21, logic low marking, logic high spacing, standard asynchronous ASCII, even parity, 300 baud.

More than one peripheral can be connected to the CR21 simultaneously, but all cannot communicate at once. If the CR21 is already communicating with one of these, it can only be interrupted by the system scan and internal clock.

5.3 ACCESSING DATA IN FINAL DATA MEMORY

Data arrays stored in final data memory may be accessed via the keyboard and displayed on the LCD (*7 Mode) or dumped to the cassette (*8 Mode) or printer (*9 Mode). Upon entering any of these modes, the mode (07, 08, 09) is displayed in the ID field along with the current data location number of the DSP. The data location numbers range from 0-607 corresponding to the 608 data point storage locations of the final data memory.

In either the *7 or *9 mode, the desired data is accessed by keying in the corresponding data location number and pressing the A Key. This action loads the repective mode pointer (DPTR, PPTR) discussed in Section 5.1 with the location of the desired data. If the user-entered data location number does not correspond to the beginning of an output data array, it is automatically advanced to the beginning of the next data array. In the *7 or *9 mode, the oldest data array in final data memory may be accessed by entering a location number which exceeds the current location of the DSP by 1, i.e., move the respective mode pointer 1 location ahead of DSP.

If a data location number larger than 607 is entered, the respective mode pointer defaults to location 0.

5.4 RECALLING DATA TO THE DISPLAY - *7 MODE

The *7 Mode allows the user to step through stored data in memory and display it on the LCD by using the keyboard.

Upon entering the *7 Mode, the DSP location number is displayed. Key in the desired data location number as described in Section 5.3 and press the A key. The first reading of the array will be displayed as 01:000X, where X is the number of the output table that generated the data array.

Pressing the A Key successively steps through memory towards the DSP. When the memory read pointer, DPTR, coincides with the DSP, a 01: is displayed in the ID field, followed by 0000. If the DPTR is advanced beyond the DSP, the data may be meaningless until a new start of data array is detected and the ID field in the display is reset to 01:.

To locate a particular data array enter a location number that will position the memory read pointer (DPTR) behind the desired data and advance forward (A Key), observing the day and time. If the initial guess is too far off, try again by pressing the B Key which returns to the start of the *7 MODE and enter a new location number.

5.5 RECORDING DATA ON THE CASSETTE RECORDER - *8 MODE

The cassette recorder can either be left in the field with the CR21 for continuous data recording or be taken back periodically to the field sites to dump the data stored in final memory. NOTE: 1) The performance of the RC235 Cassette Recorder is UNRELIABLE at temperatures below 0°C; 2) Only "NORMAL BIAS" tapes should be used for recording.

CONTINUOUS RECORDING ON THE CASSETTE RECORDER

Connect the recorder, then run the cassette ahead until the tape leader is past the recording head. With the CR21 programmed and ready to go plug one end of the SC235 Cassette Connector Cable into the MIC and REMOTE sockets in the recorder and the other end into the CR21. Press the RECORD and PLAY buttons on the recorder simultaneously to set it for recording. The tape will not move because the REMOTE connector is disabling it. To test all SC235 connections, enter the *8 MODE and press A. The 0 to the left of the 8 in the ID field will disappear immediately. Within ten seconds, the CR21 will activate the tape recorder and write 512 "dummy" data points. The 0 in the ID field will return upon completion of the dump. If the cassette did not advance, check all SC235 connections and the RECORD button.

Enter the *0 Mode to log data. When final data is stored, you can watch the data on the display as it is transmitted to the printer port at two readings per second. The output to the cassette will not occur until 512 data points have been stored in final memory.

The cassette RECORD indicator, a light or meter, should show when the cassette recorder is recording. By using the small earphone included with the cassette recorder, you can listen to the data as it is written to tape. Properly recorded data is a sequence of sounds starting with a "short", high pitched tone, followed by an undulating lower pitched "blat", and ending with another short high pitched tone.

One side of a 60-minute cassette recorded in FORMAT II, holds about 180,000 data points. (Note: one side of a 60-minute cassette recorded in CSI's original FORMAT I holds about 8,000 data points). Figure 5-3 shows the format of data recorded from the CR21 onto the cassette recorder.

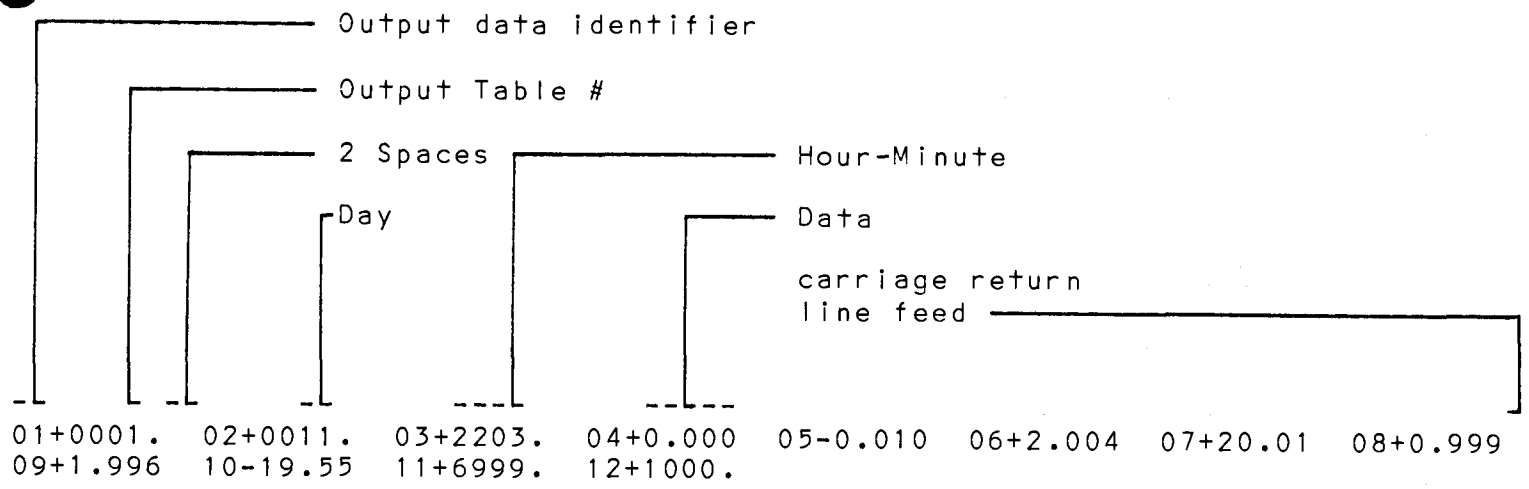

Figure 5-3 Typical format of data recorded from CR21 onto cassette in FORMAT II.

All lines of data except the last one in a given array will contain 8 data points (78 characters + carriage return and line feed). The last line (which may be the only one) may be shorter depending on the number of data points in the array.

When retrieving your cassette from the field, enter the *8 MODE and press the A Key. The 0 in the ID field will disappear. Within ten seconds any data in the 512 data point buffer is transmitted to the cassette. The CR21 will not respond to keyboard entries while the 0 in the ID field is blanked out. Upon completion of this residual buffer dump, the 0 will return to the display. While in the *8 MODE, the CR21 will still log data and store it in final memory, but no new data will be transmitted to the cassette. It is now safe to change cassettes.

Rewind the cassette and listen to it to be sure that data has been recorded. If something went wrong and no data is on the tape, you can recover data that is stored in final memory using the procedure in the next subsection.

Insert your new cassette into the recorder and make sure it is connected properly. Press PLAY and RECORD simultaneously. It is recommended that you execute a "dummy dump" as described above to check your connections. Finally, enter the *0 MODE to log data.

TAKING THE CASSETTE RECORDER FROM SITE TO SITE

If the 608 data points of final memory will not be exceeded between site visits, you need not leave the cassette recorder in the field. When the site is visited, the stored data can be transferred to tape.

Connect the tape recorder to the CR21 as described at the begining of SECTION 5.5. Press the RECORD and PLAY buttons simultaneously to set it for recording. You are now ready to transfer final memory data to cassette.

Enter the *8 MODE. 08: is displayed in the ID field followed by the DSP location in the data field. Press the D Key to dump all final memory data to cassette. Upon pressing the D key, the 0 in the ID field is blanked out. Within ten seconds, 512 of the 608 final memory data points will be transmitted to tape. In the next 10 seconds, the remaining data will be transmitted. A complete memory dump may be executed regardless of the number of data points residing in final memory. When the 0 in the ID field is blanked out, the keyboard is inoperative. Upon completion of data transfer the 0 will return to the display indicating the CR21 is ready for the next command.

With the CR21 still in the *8 MODE, disconnect the tape recorder from the SC235, rewind the tape, press the PLAY button and listen for good data. If the data was not properly recorded, check all CR21-tape recorder connections and repeat the above procedure.

When finished with the cassette return to the *0 MODE. Remember, the keyboard will be inactive whenever the CR21 is scanning (i.e., colons appear in the center of the data field of the display), or when the 0 is blanked out of the ID field while in the *8 MODE.

5.6 RECORDING DATA ON THE CR56 PRINTER - *9 MODE

Like the cassette recorder, the CR56 Printer can be left either in the field with the CR21 for continuous recording or taken to the field to dump stored memory.

Using the CSI Model SC232 Interface, any 300-baud printer with an RS232 I/O port can be used in place of the CR56 Printer. To put the CR56 Printer into operation, connect it to the CR21 with an SC12 Cable Assembly and turn it on. Each time the CR21 stores data in final memory, the data will be printed on the printer.

To avoid losing data while servicing the printer, enter the *9 MODE. The CR21 will hold data in final memory until you hook the printer back up and enter the *0 MODE again. Battery drain is higher in the *9 MODE than in the *0 MODE, so don't forget to set the CR21 back to *0 before you leave.

If you can visit the field site before 608 data points have been stored, you can take the printer with you and dump the data which has been stored since your last visit. To dump data, hook the printer up and enter the *9 MODE. The current DSP location

number is displayed. Enter the location number of the desired data (Section 5.3) and press the A Key. If you wish to abort the dump, hold the # Key down until 09:0XXX. appears on the display. Entering a data location number 1 larger than the current location of DSP dumps the entire final memory.

5.7 TELECOMMUNICATIONS, CONNECTIONS, AND PROTOCOL

The CR21 contains all the protocol necessary to communicate over a telephone line. CSI's DC103A battery powered modem connects directly to the CR21 with the SC13 Cable. If other commercial modems are used, CSI's SC232 interface is required between the CR21 and the modem. Once the modem is connected to the CR21 and the telephone line, it can be dialed up from another phone. It takes the CR21 about 3 seconds to answer the phone and 10 seconds more to reply. When it answers, a carrier signal can be heard over a conventional telephone receiver. If no other action is taken, the CR21 will make the modem "hang up" after about 45 seconds.

For familiarization, it works best to call the CR21 on a standard phone. Place the phone on an acoustic coupler connected to a terminal, then try all the communication commands from the keyboard. After the CR21 answers and you have placed the phone on the acoustic coupler, the CR21 will sign on with the message HELLO followed by a carriage return, line feed, and a prompt (*). A delay of about ten seconds is normal before the sign-on response.

The CR21 is set up to communicate at 300 baud (30 cps) and transmit even parity. Each valid command character sent to the CR21 is echoed back by the CR21. A command is terminated by sending a carrage return. Upon receiving the carriage return the CR21 will echo the carriage return and send a line feed, then execute the command. If the CR21 is busy doing an input scan when you send a character, that character will not be received or echoed by the CR21. Invalid command characters are not echoed by the CR21. If the CR21 does not echo a character within 100 milliseconds of when it was sent, then that character was missed by the CR21 and it should be retransmitted. The completion of a command is signified by the CR21's sending a carrage return and line feed followed by a prompt (*). If communications cannot be established, hang up and the CR21 will resume normal operation after 20 seconds.

Similar to the *7 and *9 MODE, the modem pointer is positioned by sending the data location number (Section 5.3). The initial value of the modem pointer is equal to the data storage pointer (DSP). When sending a location number, each digit is echoed back to the sender as it is received by the CR21. If several numbers are sent, the CR21 uses the last 4 before the carriage return as

the data location number. A location number which exceeds 639 defaults to location 0. To retrieve all the data in final memory, position MPTR, the modem pointer, with a data location number which exceeds DSP by 1.

In response to certain commands, the CR21 transmits the current location number of MPTR and a checksum. These are formatted on a separate line and are preceeded by an L and C, as shown below.

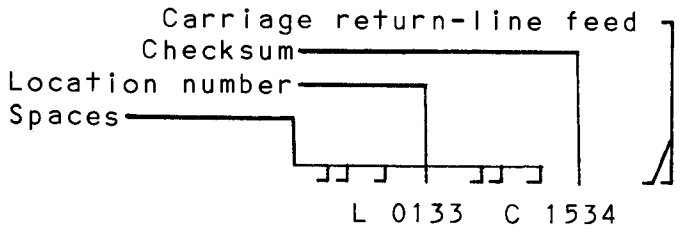

The checksum is formed by adding the ASCII value (without parity) of the transmitted characters. All characters, including spaces, are used in the sum but carriage returns and line feeds are excluded. The checksum is initialized to zero after an applicable command is received and sums all transmitted characters through the last digit of the location number. The checksum is Modulo 8192 such that 8191 is the largest checksum number and the addition of 1 to this number would yield a checksum of 0.

The following are valid commands:

0 to 607 - POSITION MEMORY POINTER - The data location number is used to initialize MPTR, the modem pointer, to the desired memory location. If the memory location specified is not a valid start of array then MPTR will be advanced to the next valid start of a data array.

A - ADVANCE or DUMP NEXT - This command is used to transmit the next array. After each array is transmitted, a location number and checksum are transmitted on an additional line. If repeated use of the A command attempts to move MPTR past DSP, two carriage return-line feeds will be printed, followed by a location and checksum.

B - BACKUP - If a data array must be re-transmitted, issue the B command. After a carriage return-line feed and prompt (*) are received, use A to re-transmit the array. Several B commands may be given consecutively to back up several arrays. Whereas it is impossible to advance past DSP with repeated A commands, repeated B commands can back over DSP.

C - CURRENT TIME AND DATA - This command causes the CR21 to output the current time of day and current sensor readings in the following format:

Table 5-1 C COMMAND DATA OUTPUT FORMAT

ID Data	Description
D xxxx T xxxx	Julian Day and Time
00:xxxx	Battery Voltage
01:xxxx	Sensor 1 (reading as defined by the input table)
02:xxxx	Sensor 2
03:xxxx	Sensor 3
	etc. through Sensor 9

D - MEMORY DUMP - This command causes transmission of all data arrays from the current MPTR position to the most recently stored data without stopping. It can be aborted by manually holding the BREAK Key down on the terminal until the CR21 responds with a prompt. This command is used for non-automated interrogation where several arrays are printed directly to a terminal. Location numbers and checksums are omitted.

E - END - The E command is used to terminate communication.

@ - This command transmits the current location of the Data Storage Pointer (DSP).

HHMMG - This command allows the user to reset the CR21 Time Clock. Enter the military time in hours and minutes, as signified by "HHMM", followed by G. When the command is transmitted, the CR21 clock will reset to the specified time. This will lengthen or shorten the current data Output Interval. Data generated by any "averaging" Output Programs for that Output Interval will be unaffected but time dependent data such as "totalize" should be noted.

SECTION 6. MAINTENANCE

6.1 BATTERY LIFE AND SERVICE

The battery voltage reading is treated as Input Channel 0 and is pre-programmed into the input table. All of the output programs can be used with the battery voltage channel just as they can with any other input channel. To display the CR21's battery voltage in hundreths of volts (e.g. 1179 = 11.79), enter the *6 Mode, then press 0. Note: the accuracy of this reading varies from one CR21 to another. The reading is generally lower than the actual voltage and can be in error by as much as 0.5V. The battery voltage can decay to 9.5V before the CR21 ceases to function. Since voltage on both alkaline and lead acid batteries is an indicator of the amount of charge available, a readout of this parameter is useful in gaging battery life.

The average power drain of the CR21 is 1 to 2 mA when left in the *0 MODE (data logging) and about 10 mA in any other mode. Eight alkaline D-cells have a nominal rating of about 7.5 amp hours. One set of eight batteries contains enough energy to power the CR21 MICROLOGGER for periods of four to eight months depending on the sensors used and data transmission intervals. A set of D-cells starts out at about 12.4 V and can be used down to 9.5 V. The amount of energy remaining in the cell is generally related to the voltage reading in this range. You should replace the alkaline cells by the time the CR21 battery voltage reading (*6, Channel 0 or battery voltage recorded with an output table) is down to about 9.5 V.

It is possible to change batteries without interrupting operation of the CR21 by hooking a 12-V battery to the 12-V and ground (⏚) terminals on the CR21 panel. This battery will take over for the internal batteries while they are being replaced.

Figure 6-1 is an exploded view of the CR21. To replace the batteries, remove the four screws on the CR21 and lift the panel from the case. The eight alkaline D-cells are held in place by plastic clips and are easily removed for replacement. The optional sealed lead acid battery pack is mounted to the case with its recharging circuitry.

Two dessicant packets are located at the sides of the batteries. These can be reactivated by warming them in an oven for 16 hours at 250° F. Active dessicant should be kept in the box to prevent condensation.

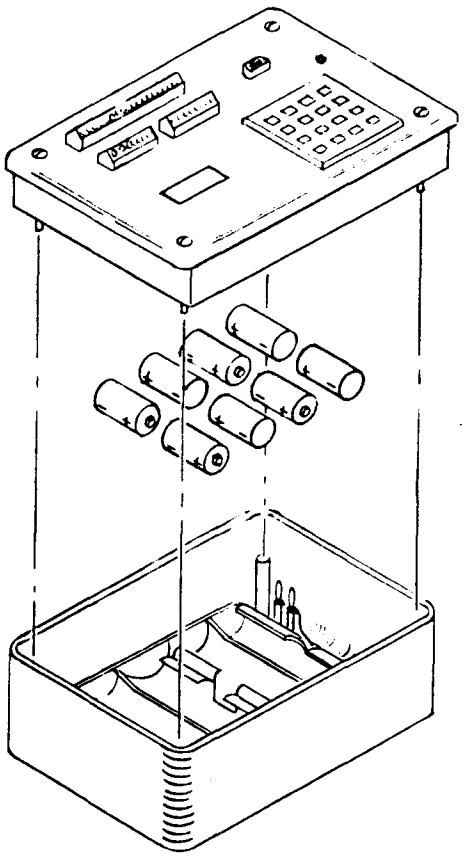

Figure 6-1 Exploded view of the CR21 MICROLOGGER battery pack and panel.

6.2 CR21L SEALED LEAD ACID BATTERY PACK

The sealed lead acid battery pack, available as an option, is rated at 2.5 amp hours and is generally used in applications where the MICROLOGGER is used with AC or solar power with battery backup. This battery pack should not be drained below 11.76 V before recharging, otherwise, permanent damage to the lead acid cells may result. CSI will not warranty batteries or cells that have been damaged as a result of a deep discharge state. A 110-V, A/C wall plug recharge unit comes standard with the battery pack. The charging current is regulated inside the battery container allowing float charging of the system for A/C operation with battery backup. The charging circuit is temperature compensated.

SPECIFICATIONS

Battery: 6 V, 2 AH, sealed lead acid type (2 each connected in series for 12 VDC).
Manufactured by: Gates #810-0011X.
Charging Circuit: Float charge with constant voltage regulation.
Transformer Power Supply: PS-7021 by Dormeyer 120 VAC to 16 VDC at 350 mA max.
Open Circuit Voltage at Full Charge: 12.95 (typ).
Open Circuit Voltage at Full Discharge: 11.76 (typ).
Time Required to Bring Battery from Full Discharge:
To full charge - 40 hours
To 95% full charge - 20 hours

The power input jack is located on the left side of the battery pack enclosure.

6.3 EXTERNAL BATTERY PACKS

Any external 9.5 V to 13 V supply can be used to power the CR21 instead of the internal batteries. Hook the external supply to the 12 V and ground (⏚) terminals on the CR21 panel. Even alkaline cells corrode after several years, so remove the internal batteries if they will not be used for a while.

Even though the average current drain in the CR21 is small, instantaneous current flow can reach 150 mA while the PROMS are activated. Do not run small wires long distances to the external power supply or lead wire resistance will reduce the effective supply voltage.

Also note that any external 115-V power supply must have good isolation between the transformer primary and secondary or ground loop errors will degrade the sensor readings. Use a Faraday shielded transformer for best results.

Because the average power drain is so low, a small solar cell and a 2.5 amp hour, external, rechargeable battery will provide an inexpensive, long-lived power source.

6.4 CR21 CHECKOUT AND CALIBRATION

No periodic maintenance of the CR21 is necessary. We do not recommend that you try to repair or calibrate the MICROLOGGER. It is small enough to be shipped easily to the factory should a malfunction occur.

Because of the processing done in the CR21, it is much easier to detect failures than with standard data loggers. You would not know if a sensor reading of 1.58 mV is good or bad, but it would be obvious that a nighttime maximum temperature of 115 degrees F was an error. An error in average wind speed might be harder to detect.

The best procedure to check the CR21's accuracy is to hook up a known set of good sensors, or better still, calibrated resistors and voltage sources. Check the sensor outputs in the *6 Mode, then program the output tables and record a few readings. Any problems should show up.

The CR21 will work as a voltmeter using Input Program 1 or a millivolt meter using Input Program 2. Use the multiplier and offset for each channel to scale the voltages to simulate any desired sensor output.

The display will often show more resolution than sensor accuracy. For example, temperature is displayed to 0.01 of a degree, the resolution of the analog-to-digital converter is only 0.05 of a degree, and the accuracy of the sensor is only 0.2 of a degree C.

SECTION 7. CR21 PROGRAMMING EXAMPLE

7.1 GENERAL

The following data logging application outlines some of the typical considerations in producing a set of documented programming forms. The less obvious points are explained but the user is referred to the program descriptions in Appendix A and B, general programming technique in Section 4 and sensor connections in Section 2 for additional explanation.

The first step in any data logging application is to define the data needs. For our example, utilize the on-site processing capability to minimize the amount of recorded data. The desired data, the sensors and their calibration are compiled in the EXAMPLE DATA LIST. Eleven types of data from eight sensors are generated, along with an ID output, battery voltage, and a control task.

At this point the list should be reviewed to determine any constraints due to the CR21 or requirements imposed on the input processing by the desired output processing. The following might be noted:

1. The leaf wetness, soil moisture and RH sensors require AC excitation and must connect to Channels 5-7.

2. The RH input program requires temperature in degrees centigrade on Channel 4 for temperature compensation.

3. The pyranometer is calibrated in units of power density but the hourly energy density is to be recorded. The input multiplier must account for the input scan interval in seconds to convert kW to kJ.

$$M = (1\ kW/m^2)(60\ s)/8.35\ mV = 7.186\ kJ/m^2/mV$$

4. The leaf wetness sensor's wet/dry transition occurs at approximately 200 k ohms. Thus, the wet state voltage is 1 to 2 V, and the dry state is less than 1 V. A single bin histogram ranging from 0 to 1 V will record the fraction of the output interval that the sensor was dry. The amount of "wet" time may then be computed.

5. The raingage is calibrated for 1mm/tip, but rainfall intensity in hundredths of an inch per 15 minutes is desired from the Event Counter Program. A multiplier of 3.937 is used in the input program (1 tip = 1mm = 0.03937 in.) to convert output to hundredths of an inch.

   Final data from the Event Counter Program is intermittent. If any rainfall is registered by Channel 9 in a 15 minute period, an independent output scan, with an ID of 249, is initiated. The output consists of the ID, the time, and the hundredths of inches of rain that occurred in the 15 minute period.

6. The water level of an adjacent stream is to be output every 30 minutes conditional on the water surface exceeding a given elevation. Note that the output interval for Table 3 is 2000 minutes. By setting the output interval greater than 24 hours, Table 3 will execute only when the water surface elevation exceeds the given elevation.

   A "jumper" wire must be connected between the designated output port (in this case, #1) and Input Port #1. In this way, Input Port #1 will go high when the given water level is reached, and the Conditional Output Program (#65) will be activated. The Conditional Output Program is followed by the Sampling Program (50) to sample the water level at the interval specified by the Conditional Output Program.

SECTION 7. CR21 PROGRAMMING EXAMPLE

EXAMPLE DATA LIST

	HOURLY DATA	SENSOR	SENSOR OUTPUT
1.	Relative Humidity Sample	CSI RH & Temp. Probe	%RH (Processed)
2.	Total Solar Energy	Silicon Pyranometer	8.35 mV/kW/m²
3.	Leaf Wetness Histogram	Leaf Wetness Sensor	Dry above 200 k ohm or less than 1 V
4.	Rainfall Intensity in 0.01"/15 min.	Tipping Bucket Raingage	1mm/tip
5.	Control Cooler in response to air temp.	CSI RH & Temp. Probe	°C
	DAILY DATA		
1.	Station ID#	N/A	N/A
2.	Battery Voltage Sample	N/A	N/A
3.	Air Temp.--open 10 bin histogram $15°C \leq T < 35°C$	CSI RH & Temp. Probe	°C (Processed)
4.	Soil Moisture Sample	Moisture Block	Nonlinear resistance
5.	Total Rainfall	Tipping Bucket	1mm/tip
6.	Maximum Wind Speed	Switch Closure Anemometer	mph = 1.789F + 1 (F = counts/sec)
7.	Wind Speed Rose	Above Anemometer & Potentiometer Wind Vane	Above 360 Deg. = 1 V
	CONDITIONAL DATA		
1.	Water Surface Level	Potentiometer Water Level Gage	0 - 2 V = 0 - 10 ft.

The completed programming forms and a sample output follows.

EXAMPLE

CR21 Input Table Coding Form

CR21 ID 1035 Start Date Julian Day 253 (September 10) Start Time 1200 (12)

NOTE: Select input program numbers from appendix A of the CR21 Operator's Manual. Specify a multiplier (a) and offset (b) for each sensor using the equation EU = aX + b to convert the sensor output (X) to engineering units. EU = Final Output Engineering Units. IU = Input Units e.g. volts (V), millivolts (MV), and counts.

Sensor Number	Sensor Description and Calibration			Final Output (EU)	
	Range (EU) (V, MV, DC Resistance)	Input Program	Program No.	Multiplier (EU/IU)	Offset (EU)
1	Silicon Pyranometer Max. radiation <1.3 kW/m^2 (V, MV, DC Resistance)	8.35 mV/kW/m^2 Millivolt	11: 2	12: 7.186	kJ/m^2 13: 0
2	Potentiometer Wind Vane 0 to 360° (V, MV, DC Resistance)	0-1 V = 0-360° DC Excitation and Volts	21: 3	22: 360	Direction in Degrees 23: 0
3	Potentiometer Water Level Gage 0-10 ft (V, MV, DC Resistance)	0-2 V = 0-10 ft DC Excitation and Volts	31: 3	32: 5	Feet 33: 0
4	Air Temperature -- CSI Model 201 RH & Temperature Probe -35°C to 47°C (V, MV, DC & AC Resistance)	Temperature	41: 7	42: 1	°C 43: 0
5	Relative Humidity -- CSI Model 201 RH & Temperature Probe 15-97 RH (V, MV, DC & AC Resistance)	Relative Humidity	51: 8	52: 1	%RH 53: 0
6	Soil Moisture Block -- nonlinear resistance 0-2 V (V, MV, DC & AC Resistance)	AC Excitation and Volts	61: 5	62: 1	Volts 63: 0
7	Leaf Wetness Sensor 0-2 V Pulse counter (4095 counts per scan maximum)	0 to <1 V = Dry 1 to 2 V = Wet AC Excitation and Volts	71: 5	72: 1	Volts 73: 0
8	Wind Speed -- contact anemometer 1-45 m/s Pulse counter (15 counts per scan maximum)	MPH = (1.789)(counts/sec)+1 MPH = (0.0298)(counts/min)+1 Pulse Counts	81: 6	82: .0133	m/s 83: .4470
9	Tipping Bucket Raingage Variable	1 tip/mm = 1 tip/0.03937 in Pulse Counts	91: 6	92: 3.937	Hundredths of an inch 93: 0

EXAMPLE

CR21 Output Table Coding Form

CR21 ID 1035 Start Date Julian day 253 (September 10) Start Time 1200 (12)

NOTE: Select output program number and parameters from appendix B of the CR21 Operator's Manual. Output ID numbers 1, 2 and 3 identify table number, day and time. ID numbers 4 and greater identify data generated by ouput programs. Only positive integers are used to program the output table.

Output Table Number (1, 2 or 3) 1 Output Time Interval (minutes) 03: 60

Table Entry Number	Output Program and Data Description		Output ID No.		
	Param 1 descrip.	Param 2 descrip.	Program No.	Parameter 1	Parameter 2
1	Sample -- Relative Humidity				
	Input Channel		11: 50	12: 5	13: 0
2	Totalize -- Solar Energy Total	kJ/m^2			5
	Input Channel		21: 52	22: 1	23: 0
3	Standard Histogram -- closed	Leaf Wetness Histogram 1 Bin = ratio of "dry" time			6
	Range Input Channel	Number of Bins (closed form)	31: 55	32: 7	33: 1
4	Histogram -- continued from #3				N/A
	Lower Limit of Range	Range (upper-lower limit)	41: 0	42: 0	43: 1
5	Event Counter -- Rainfall Intensity: Hundredths of an inch/15 min.				Output ID = 249 (intermittent)
	Input Channel	Time Period Minutes	51: 57	52: 9	53: 15
6	Set Point Controller	Turn cooler on when air temp. $\geq 33^{\circ}C$; off at $30^{\circ}C$			N/A
	Input Channel	Output Port to be activated	61: 58	62: 4	63: 4
7	Set Point Controller -- continued from #6				N/A
	Activate Limit	Deactivate Limit	71: 59	72: 33	73: 30
8			81:	82:	83:
9			91:	92:	93:

EXAMPLE

CR21 Output Table Coding Form

CR21 ID 1035 Start Date Julian day 253 (September 10) Start Time 1200 (12)

NOTE: Select output program number and parameters from appendix B of the CR21 Operator's Manual. Output ID numbers 1, 2 and 3 identify table number, day and time. ID numbers 4 and greater identify data generated by ouput programs. Only positive integers are used to program the output table.

Output Table Number (1, 2 or 3) 2 Output Time Interval (minutes) 03: 1440

Table Entry Number	Output Program and Data Description		Output ID No.		
	Param 1 descrip.	Param 2 descrip.	Program No.	Parameter 1	Parameter 2
1	Fixed Data -- Output CR21 ID Number		2		
	ID Number		11: 62	12: 1035	13:
2	Sample -- Battery Voltage (Volts)		3		
	Input Channel		21: 50	22: 0	23: 0
3	Standard Histogram -- open	Temp. Histogram 10 Bins	4 through 13		
	Range Input Channel	1000 + number of bins (open form)	31: 55	32: 4	33: 1010
4	Histogram -- continued from #3				
	Lower Limit of Range	Range (upper-lower limit)	41: 0	42: 15	43: 20
5	Sample -- Soil Moisture (Volts)		14		
	Input Channel		51: 50	52: 6	53: 0
6	Totalize -- Total Rainfall in hundreths of an inch		15		
	Input Channel		61: 52	62: 9	63: 0
7	Maximize -- Maximum Wind Speed in m/s		16		
	Input Channel		71: 53	72: 8	73: 0
8	Weighted Histogram	Wind Speed Rose in m/s 8 direction sectors (bins)	17 through 24		
	Range Input Channel	Number of bins (closed form)	81: 55	82: 2	83: 8
9	Histogram -- continued from #8				
	Lower Limit of Range	Range (upper-lower limit)	91: 8	92: 0	93: 360

EXAMPLE

CR21 Output Table Coding Form

Julian day 253

CR21 ID 1035 Start Date (September 10) Start Time 1200 (12)

NOTE: Select output program number and parameters from appendix B of the CR21 Operator's Manual. Output ID numbers 1, 2 and 3 identify table number, day and time. ID numbers 4 and greater identify data generated by ouput programs. Only positive integers are used to program the output table.

Output Table Number (1, 2 or 3) 3 Output Time Interval (minutes) 03: 2000

Table Entry Number	Output Program and Data Description		Output ID No.		
	Param 1 descrip.	Param 2 descrip.	Program No.	Parameter 1	Parameter 2
1	Set Point Controller	Activate Output Port 1 when water level = 2 ft., deactivate when = 1 ft.			N/A
	Input Channel	Output Port Number	11: 58	12: 3	13: 1
2	Set Point Controller -- continued from #1				N/A
	Activate Limit	Deactivate Limit	21: 59	22: 2	23: 1
3	Conditional Output	Inititates output scan with ID and time, followed by output from remaining progs. 1-2			
	Output Interval in Minutes	Output Array ID	31: 65	32: 30	33: 100
4	Sample -- Water Level in ft.				3
	Input Channel		41: 50	42: 3	43: 0
5			51:	52:	53:
6			61:	62:	63:
7			71:	72:	73:
8			81:	82:	83:
9			91:	92:	93:

EXAMPLE OUTPUT

```
    ↙Table 1 ↙Day      ↙Time     ↙% RH      ↙kJ/m²   ↙Dry ratio
01+0001.  02+0253.  03+2200.  04+075.3  05+42.69  06+1.000
    ↙Event Counter
      ID      ↙Time     ↙.03937 in Rain
01+0249.  02+2245.  03+3.937
01+0001.  02+0253.  03+2300.  04+096.6  05+0.468  06+0.520
01+0249.  02+2300.  03+07.87
     Conditional
   ↙Output ID ↙Time        ↙Water level
01+100.0  02+2330.  03+2.000
01+0001.  02+0253   03+2400.  04+095.2  05+0.411  06+0000.
   ↙Table 2   Fixed Data
             ↙ID      ↙Battery ↙Temperature Histogram————————————————
01+0002.  02+1035.  03+11.85  04+0.016  05+0.021  06+0.132  07+0.152  08+0.170
                                                     Soil
                                                    ↙moisture ↙rainfall
————————————————————————————————————————————————————————————————————————————————↙max wind
09+0.180  10+0.125  11+0.087  12+0.075  13+0.042  14+1.642  15+47.24  16+2.104
   ↙————————————————————————Wind speed rose————————————————————————————————↘
17+0.048  18+0.099  19+0.388  20+0.850  21+0.328  22+0.158  23+0.142  24+0.091
01+100.0  02+2400   03+2.200
01+100.0  02+0030.  03+1.480
01+0001.  02+0254.  03+0100.  04+093.3  05+0.350  06+0000.
```

7.2 PARAMETER PASSING PROGRAM EXAMPLES

EXAMPLE 1: Heat Flow

For a hot water heat system, the average heat transfer rate is:

$$\overline{Q} = K(\Sigma Fi(THi-TRi))/N$$

Where $\overline{Q}$ = Average heat transfer rate
K = A known constant
Fi = Water flow rate
THi = Hot side water temp.
TRi = Return side water temp.
N = Number of input scans per CR21 output interval
i = ith input scan

The average heat transfer rate can be monitored directly by using both the Intermediate X-Y and Intermediate X*Y Output Programs.

Assume: Channel 1 monitors hot side water temp. (TH)
Channel 2 monitors return side water temp. (TR)
Channel 3 monitors flow rate (F)
All input programming has been entered

Output may be in any table at desired output interval.

OUTPUT PROGRAMMING		FUNCTION
Program #	66	Intermediate X-Y Program leaves THi-TRi in internal Channel 11
Parameter 1	1	TH Channel Number
Parameter 2	2	TR Channel Number
Program #	68	Intermediate X*Y Program outputs the average F*(TH-TR)
Parameter 1	3	Flow channel number
Parameter 2	11	(TH-TR) internal channel number

At the end of the output interval,

$$(\sum_{i=1}^{N} Fi(THi-TRi))/N$$

is output by Program 68. Note that Program 66 will also output the mean (TH-TR).

EXAMPLE 2: Wind Power Rose

Wind power may be expressed as

$$P = KS^3$$

Where P = Wind power
S = Wind speed
K = Proportionality factor

Wind power from a given number of direction sectors may be determined using Output Programs 68 and 55.

Assume: Channel 1 monitors wind direction
Channel 8 monitors wind speed
All input programming has been entered

Output may be in any table at desired output interval.

C

OUTPUT PROGRAMMING FUNCTION

Program #	68	Intermediate X*Y Program leaves S^2 in internal Channel 10
Parameter 1	8	Wind speed channel number
Parameter 2	8	Wind speed channel number
Program #	68	X*Y = S^3 is left in internal Channel 10
Parameter 1	10	S^2 channel number from previous program
Parameter 2	8	Wind speed channel number
Program #	55	Closed, weighted value histogram program; wind direction is the range channel, 8 sectors; windspeed cubed in Channel 10 is the weighted value channel.
Parameter 1	1	Wind direction channel number
Parameter 2	8	Number of direction sectors
Parameter 3	10	Weighted value channel number (S^3)
Parameter 4	0	Start point of direction
Parameter 5	360	Range of direction

At the end of the output interval, each of the 8 sectors which contain a corresponding sum of wind power, is divided by the number of input scans per output interval. In this manner, each sector is proportional to the average windpower which occurred in that sector over the entire output interval. Note that the first Program 68 will output the mean S^2 and the second Program 68 will output the mean S^3.

APPENDIX A

INPUT PROGRAM LIBRARY

PROM 266

THE FOLLOWING INPUT PROGRAMS WILL BE EXECUTED ACCORDING TO THE ENTRIES MADE IN THE INPUT TABLE (*4 MODE) OF THE CR21. EACH ENTRY IN THE INPUT TABLE INCLUDES THREE PARAMETERS AS FOLLOWS:

Parameter 1 - Input Program Number
Parameter 2 - Multiplier
Parameter 3 - Offset

A MORE DETAILED DESCRIPTION OF INPUT PROGRAMMING IS FOUND IN SECTION 4.2 OF THE MANUAL.

INPUT PROGRAM SUMMARY

PROGRAM NUMBER	PROGRAM NAME
1	DC Volts
2	DC Millivolts
3	DC Volts with excitation
4	DC Millivolts with excitation
5	AC Volts with excitation
6	Pulse Counts
7	Temperature (Model 101 Probe)
8	Relative Humidity -- 5th Order (Model 201 Probe)
9	Relative Humidity with selection of comp. temperature channel (Model 201 Probe)
10	Temperature (Model 102 Probe) for 5 deg. C to 95 deg. C range.

THE NEXT FEW PAGES GIVE DETAILED DESCRIPTIONS OF THE ABOVE PROGRAMS.

I N P U T P R O G R A M L I B R A R Y

**** DC VOLTS ****

Program Number -- 1

Input Range -- -.2 volts to +2.5 volts

Resolution -- ±1 millivolt

Execution Sequence and Timing --

An auto-zero measurement is made by integrating the input signal with the input effectively shorted for 100 milliseconds. Then the input is connected to the appropriate channel and a measurement is made by integrating that signal for 100 milliseconds. Next the auto-zero measurement is subtracted from the signal measurement and the result is multiplied by the user-entered multiplier and added to the user-entered offset, then stored for processing by output programs.

**** DC MILLIVOLTS ****

Program Number -- 2

Input Range -- -2 millivolts to +25 millivolts

Resolution -- ±5 microvolts

Execution Sequence and Timing --

An auto-zero measurement is made by integrating the input signal with the input effectively shorted for 200 milliseconds. The input is then connected to the appropriate channel and a measurement is made by integrating that signal for 200 milliseconds. The auto-zero measurement is then subtracted from the signal measurement and the result is multiplied by the user-entered multiplier and added to the user-entered offset then stored for processing by ouput programs.

**** DC VOLTS WITH EXCITATION ****

Program Number -- 3

Input Range -- -.2 volts to +2.5 volts

Resolution -- ±1 millivolt

Execution Sequence and Timing --

The 2 volt (referenced to analog common) DC excitation output on the CR21 panel is switched on then an auto-zero measurement is made by integrating the input signal with the input effectively shorted for 100 milliseconds. Next the input is connected to the appropriate channel and a measurement is made by integrating that signal for 100 milliseconds. The auto-zero measurement is then subtracted from the signal measurement and the result is multiplied by the user-entered multiplier and added to the user-entered offset then stored for processing by output programs. When more programs than one using DC excitation are executed consecutively, the excitation stays on until the last one is completed.

**** DC MILLIVOLTS WITH EXCITATION ****

Program Number -- 4

Input Range -- -2 millivolts to +25 millivolts

Resolution -- ±5 microvolts

Execution Sequence and Timing --

The 2 volt (referenced to analog common) DC excitation output on the CR21 panel is switched on then an auto-zero measurement is made by integrating the input signal with the input effectively shorted for 200 milliseconds. The input is connected to the appropriate channel and a measurement is made by integrating that signal for 200 milliseconds. The auto-zero measurement is then subtracted from the signal measurement and the result is multiplied by the user-entered multiplier and added to the user-entered offset then stored for processing by output programs. When more programs than one using DC excitation are executed consecutively, the excitation stays on until the last one is completed.

**** AC VOLTS WITH EXCITATION ****

Program Number -- 5

Input Range -- -.2 volts to +2.5 volts peak to peak measured with respect to analog common (Channels 5, 6, and 7 only). See Section 2.4 in the manual for details on AC measurement.

Resolution -- ±1 millivolt

Execution Sequence and Timing --
The 4 volt (referenced to analog common) AC excitation output on the CR21 panel is switched on for 400 milliseconds and an auto-zero measurement is made by integrating the input signal with the input effectively shorted for 100 milliseconds. Then the input is connected to the appropriate channel and a measurement is made by integrating that signal for 100 milliseconds. The auto-zero measurement is then substracted from the signal measurement and the result is multiplied by the user-entered multiplier and added to the user-entered offset then stored for processing by output programs. When more programs than one using AC excitation are executed consecutively, the excitation stays on until the last one is completed.

**** PULSE COUNTS ****

Program Number -- 6

Input Range -- Limited by the count range of the channel used. Channel 8 has a range of 4095 counts per minute and Channel 9 has a range of 15 counts per minute.

Execution Sequence and Timing --
Each time the inputs are scanned, the count from the selected channel is multiplied by the user-entered multiplier and added to the user-entered offset. The result is stored for later use in output processing. Immediately after the count is scanned, the counter is electronically reset by a 4 microsecond pulse.

**** TEMPERATURE (MODEL 101 PROBE) ****

Program Number -- 7

Sensor Type -- CSI Model 101 Thermistor Probe or equivalent. An equivalent can be constructed according to the top diagram of Figure 2-6 in the manual where Rs is a FENWAL Model UUT51J1 Thermistor and R2 is a 249k .5% resistor.

Input Units -- Centigrade Degrees

Input Range -- -40 deg. C to +60 deg. C

Input Resolution --

Temperature (deg. C)	Resolution (deg. C)
-40	.14
-20	.061
0	.04
20	.045
40	.071
60	.12

Curve Fit Error --

Range (deg. C)	Error (deg. C)
-40 to +55	$\pm$.6
-35 to +47	$\pm$.18
-10 to +45	$\pm$.09

Execution Sequence and Timing --

The 2 volt (referenced to analog common) DC excitation output on the CR21 panel is switched on then an auto-zero measurement is made by integrating the input signal with the input effectively shorted for 100 milliseconds. The input is then connected to the appropriate channel and a measurement is made by integrating that signal for 100 milliseconds. The auto-zero measurement is then subtracted from the signal measurement and the result is used in a 5th order polynomial to compensate for the nonlinearity of the thermistor bridge circuit. This value (now in degrees C) is multiplied by the user-entered multiplier and added to the user-entered offset then stored for processing by output programs. When more programs than one using DC excitation are executed consecutively, the excitation stays on until the last one is completed.

**** RELATIVE HUMIDITY--5TH ORDER (MODEL 201 PROBE) ****

Program Number -- 8

Sensor Type -- CSI Model 201 Relative Humidity Probe or equivalent. An equivalent would consist of a thermistor probe as described under Program 7 and a PHYS-CHEM RESEARCH Model PCRC-11 Sulfonated Polystyrene Humidity Sensor connected as shown in Figure 2-8 of the manual where R1 and R2 are 10k 1% resistors.

Limitations -- The thermistor circuit has to be connected to Channel 4 and the humidity sensor can only be used with Channel 5, 6, or 7. Channel 4 has to be programmed to input temperature in deg. C. If more than one humidity sensor is used, the temperature correction will still come from the sensor on Channel 4. This correction affects the final value of humidity by .36% per deg. C.

Input Units -- % relative humidity

Input Range -- 10% to 95% relative humidity

Input Resolution -- better than .5% relative humidity

Curve Fit Error -- $\pm$1% from 14% to 94%, $\pm$3% from 11% to 100%

Execution Sequence and Timing --
The 4 volt (referenced to analog common) AC excitation output on the CR21 panel is switched on for 400 milliseconds and an auto-zero measurement is made by integrating the input signal with the input effectively shorted for 100 milliseconds. The input is then connected to the appropriate channel and a measurement is made by integrating that signal for 100 milliseconds. The auto-zero measurement is then subtracted from the signal measurement and the result is used in a 5th order polynomial to compensate for circuit nonlinearity. The linearized value for humidity (in %) is then corrected for temperature using the value of temperature in deg. C from Channel 4. The corrected value is then multiplied by the user-entered multiplier and added to the user-entered offset before it is stored for processing by output programs. When more programs than one using AC excitation are executed consecutively, the excitation stays on until the last one is completed.

**** RELATIVE HUMIDITY--WITH SEPARATE TEMP. CH. ****

Program Number -- 9

This program is identical to program 8 except that the input channel used for temperature compensation is channel 2, 3, or 4 where humidity is being measured on channel 5, 6, or 7 respectively.

**** TEMPERATURE -- 102 PROBE ****

Program Number -- 10

This program is the same as program 7 except that the polynomial coefficients are set to optimize accuracy in the range between 5 and 95 degrees C with the model 102 probe. Within this range, linearization error is less that .1 degree C. At 100 deg. C. the linearization error is -.3 deg. C.

APPENDIX B

OUTPUT PROGRAM LIBRARY

PROM 266

THE FOLLOWING OUTPUT PROGRAMS WILL BE EXECUTED ACCORDING TO THE ENTRIES MADE IN OUTPUT TABLES 1, 2, AND/OR 3 OF THE CR21.

OUTPUT PROGRAM SUMMARY

PROGRAM NUMBER	PROGRAM NAME
50	Sample
51	Average
52	Totalize
53	Maximize, Time of Maximum
54	Minimize, Time of Minimum
55	Histogram
56	Windvector
57	Event Counter Program
58-59	Set Point Controller
60	Timed Port Turn On
61	Standard Deviation
62	Fixed Data
63	Time of Input Port Change
64	Fast Output (10 to 30 sec)
65	Conditional Output
66	Intermediate X-Y
67	Intermediate Input Port Status
68	Intermediate X*Y
69	Intermediate X/Y
70	Average Cubed Wind
71	Vapor Pressure / Vapor Pressure Deficit
72-73	Growing Degree Days

SPECIAL KEYBOARD FUNCTIONS

*D	Manual Scan

THE NEXT FEW PAGES GIVE DETAILED DESCRIPTIONS OF THE ABOVE PROGRAMS.

OUTPUT PROGRAM LIBRARY

**** 50 SAMPLE ****

FUNCTION

Store the sensor reading when the output interval specified in the output table is reached.

OUTPUT PROGRAM NUMBER	50
PARAMETER 1	INPUT CHANNEL NUMBER
PARAMETER 2	N.A.
OUTPUTS GENERATED	1
INTERMEDIATE STORAGE	1

**** 51 AVERAGE ****

FUNCTION

Average the one-minute readings over the period specified by the output table.

OUTPUT PROGRAM NUMBER	51
PARAMETER 1	INPUT CHANNEL NUMBER
PARAMETER 2	N.A.
OUTPUTS GENERATED	1
INTERMEDIATE STORAGE	1

**** 52 TOTALIZE ****

FUNCTION

Totalize the one-minute readings over the time period specified by the output table . If the sensor input is in terms of EU/minute (e.g., Langley/minute), the output will be

the integrated value (e.g., Langley). If the sensor input is not a function of time (e.g., temperature), the output will be the sum of the one-minute readings.

The largest number that can be output is 6999. If the sum of the one-minute readings will exceed this number, change the multiplier in the input table to generate smaller readings. For example, instead of integrating joules per meter squared, integrate kilojoules per meter squared.

OUTPUT PROGRAM NUMBER	52
PARAMETER 1	INPUT CHANNEL NUMBER
PARAMETER 2	N.A.
OUTPUTS GENERATED	1
INTERMEDIATE STORAGE	1

**** 53 MAXIMIZE, TIME OF MAXIMUM ****

FUNCTION

Output the maximum value of the one-minute readings and/or the time the maximum occured on any input channel during the time interval specified in the output table. The maximum is reset to the instantaneous reading on the first scan after the output interval. Both the maximum and the time are reset to the current value on the first scan after the output interval. Depending on the value of parameter 2, the outputs generated may be one or two. When both maximum and time are output, the maximum will appear first, followed by time. The time is output as HHMM where HH is hours and MM is minutes.

OUTPUT PROGRAM NUMBER	53
PARAMETER 1	INPUT CHANNEL NUMBER
PARAMETER 2	0 FOR MAXIMUM ONLY 1 FOR BOTH MAXIMUM AND TIME OF MAXIMUM
OUTPUTS GENERATED	1 OR 2
INTERMEDIATE STORAGE	1

**** 54 MINIMIZE, TIME OF MINIMUM ****

FUNCTION

Output the minimum value of the one-minute readings and/or the time the minimum occured on any input channel during the time interval specified in the output table. The minimum is reset to the instantaneous reading on the first scan after the output interval. Both the minimum and the time are reset to the current value on the first scan after the output interval. Depending on the value of parameter 2, the outputs generated may be one or two. When both minimum and time are output, the minimum will appear first, followed by time. The time is output as HHMM where HH is hours and MM is minutes.

OUTPUT PROGRAM NUMBER	54
PARAMETER 1	INPUT CHANNEL NUMBER
PARAMETER 2	0 FOR MINIMUM ONLY 1 FOR MINIMUM AND TIME OF MINIMUM
OUTPUTS GENERATED	1 OR 2
INTERMEDIATE STORAGE	1

**** 55 STANDARD AND WEIGHTED VALUE HISTOGRAM ****

FUNCTION

Process input data as either a standard histogram (frequency distribution) or a weighted value histogram.

The standard histogram outputs the fraction of time that the input channel is within a particular sub-range (bin) of the total specified range. This form of output is also referred to as a frequency distribution.

The weighted value histogram requires 2 input channels and sums the readings from the weighted value channel that occur while the range channel is in the corresponding sub-range (bin). The range channel is used to determine the bin into which the concurrent reading of the weighted value channel is accumulated. At the end of the output interval the values accumulated in each bin are divided by the total number of input scans to obtain the output values, i.e., the outputs are the average over the total number of scans in the output interval.

In order to obtain the mean of the weighted value channel readings that occur while the range channel is in a particular subrange, one must also output the standard Histogram (frequency distribution) of the range channel. This can be shown formally:

N is the total number of scans in the Output Interval
J is the number of scans when the range channel is in a particular subrange
$\overline{W}$ is the weighted value output for that subrange
$\overline{P}$ is the standard histogram output for that subrange
$\overline{X}$ is the mean of the weighted value readings occurring in that subrange.

Then

$$\overline{W} = \sum_{i=1}^{J} W_i / N$$

$$\overline{P} = J/N$$

$$\overline{X} = \overline{W}/\overline{P} = \sum_{i=1}^{J} W_i / J$$

For either histogram, the user must specify: 1) the range input channel, 2) the total range the histogram bins are to cover, 3) the start value (lower limit of the range), 4) the number of bins into which the range is divided.

If a second input channel is selected, the weighted value histogram is executed.

At the user's option, the histogram may be either closed or open. The open form includes all values below the start value in the first bin and all values above the range in the last bin. The user adds 1000 to the number of bins entered to obtain this form. The closed form is obtained by entering only the number of bins. With the closed form, range values falling outside the histogram range do not contribute to the output.

The difference between the closed and open form is shown in the following example for temperature values:

Start point	10 deg. C	
Range	20 deg. C	
Number of bins	10	
	Closed Form	Open Form
Range of first bin	10 to 11.99 deg.	< 12 deg.
Range of last bin	28 to 29.99 deg.	> or = 28 deg.

The most common use of a closed form weighted value histogram is the wind speed rose. Wind speed values (the weighted value channel) are accumulated into corresponding direction sectors (direction is the range channel).

Each histogram bin uses one of the 64 storage locations available in the CR21. If a 64 bin histogram were executed, no other output program could be used.

OUTPUT PROGRAM NUMBER	55
PARAMETER 1	RANGE INPUT CHANNEL NUMBER
PARAMETER 2	NUMBER OF BINS (CLOSED FORM) NUMBER OF BINS + 1000 (OPEN FORM)
NEXT OUTPUT PROGRAM NO.	0 FOR STANDARD HISTOGRAM OR CHANNEL NUMBER FOR WEIGHTED VALUE
PARAMETER 1	LOWER LIMIT OF RANGE OR START POINT
PARAMETER 2	RANGE (UPPER LIMIT - LOWER LIMIT)
OUTPUTS GENERATED	NUMBER OF BINS
INTERMEDIATE STORAGE	NUMBER OF BINS

**** 56 WINDVECTOR ****

FUNCTION

Output in order:

1. Mean windspeed (units are speed).
2. Mean windvector magnitude (units are speed).
3. Mean windvector direction (units are degrees).
4. Standard deviation of direction (units are degrees).

The input programming must leave the windspeed sample in units of speed and the wind direction sample in units of degrees.

OUTPUT PROGRAM NUMBER	56
PARAMETER 1	WIND SPEED INPUT CHANNEL NUMBER
PARAMETER 2	WIND DIRECTION INPUT CHANNEL NUMBER
OUTPUTS GENERATED	4 (as above)
INTERMEDIATE STORAGE	4

CALCULATION OF QUANTITIES OUTPUT BY WINDVECTOR

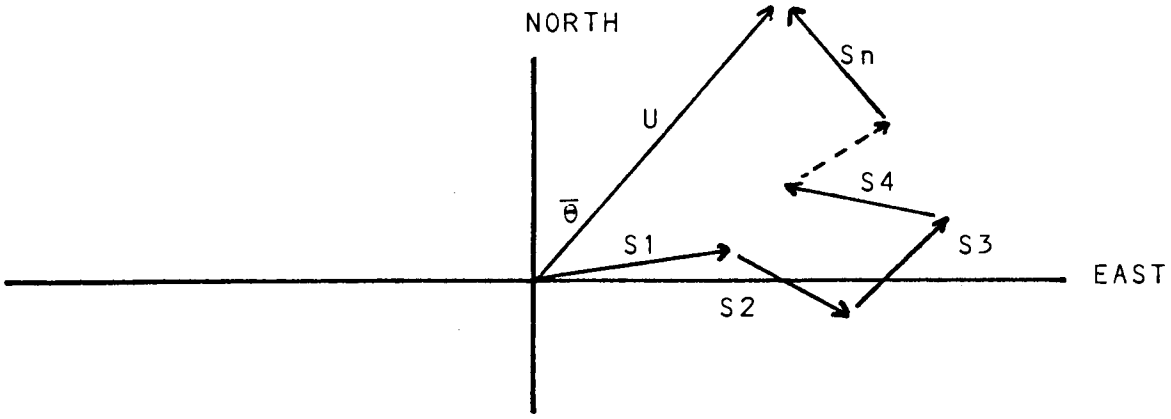

Figure 1.

In the above figure, the short, head-to-tail vectors are the input sample vectors described by Si and θi, the sample speed and direction. At the end of output interval T, the sum of the sample vectors is described by a vector of magnitude U and direction $\bar{\theta}$. If the input sample interval is t, the number of samples in output interval T is N = T/t. The mean vector magnitude, $\bar{U}$, is recorded, where $\bar{U} = U/N$.

Output 1: Mean windspeed ($\bar{S}$)

$$\bar{S} = \sum_{i=1}^{N} Si/N$$

Output 2: Mean wind vector magnitude ($\bar{U}$)

$$\bar{U} = \sqrt{\bar{x}^2 + \bar{y}^2}$$

Where $\bar{x}$ and $\bar{y}$ are defined as (Figure 2)

$$\bar{x} = \sum_{i=1}^{N} Si \ Sin\ (\theta i)/N; \quad \bar{y} = \sum_{i=1}^{N} Si \ Cos\ (\theta i)/N$$

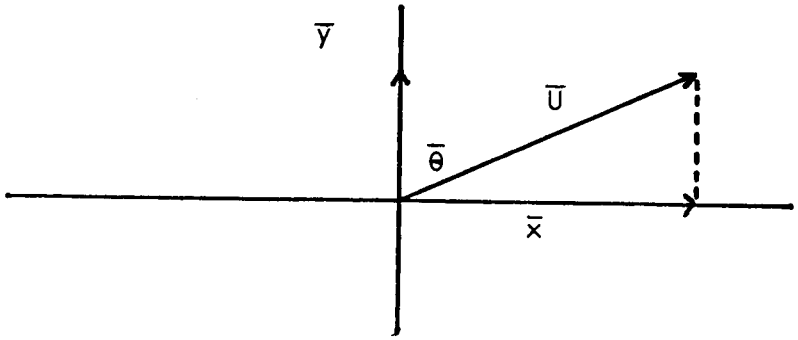

Figure 2.

Output 3: Mean wind vector direction ($\bar{\theta}$)

$$\bar{\theta} = \arctan(\bar{x}/\bar{y})$$

Where the range is $0 \leq \bar{\theta} < 360$ degrees.

Output 4: Standard deviation of direction about θ

$$\sigma(\theta) = 81\sqrt{1 - \bar{U}/\bar{S}}$$

The algorithum for $\sigma(\theta)$ is developed by noting (Figure 3) that

1) $\cos(\theta i') = Ui/Si$; where $\theta i' = \theta i - \bar{\theta}$.

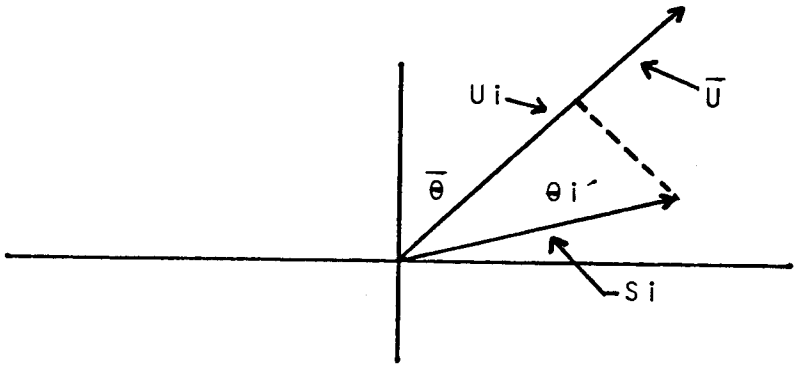

Figure 3.

The Taylor Series for the Cosine function, truncated after 2 terms is:

2) $\cos(\theta i') \simeq 1 - (\theta i')^2/2$

For deviations less than 40 degrees, the error in this approximation is less than 1%. At deviations of 60 degrees, the error is 10%.

The speed sample may be expressed as the deviation about the mean speed,

$$3) \quad Si = Si' + \bar{S}$$

Equating the two expressions for Cos (θ') (1 and 2) and using 3 for Si;

$$1 - (\theta i')^2/2 = Ui/(Si' + \bar{S}).$$

Solving for $(\theta i')^2$, one obtains;

$$(\theta i')^2 = 2 - 2Ui/\bar{S} - (\theta i')^2 Si'/\bar{S} + 2Si'/\bar{S}.$$

Summing ($\theta i'$) over N samples and dividing by N yields the variance of θ. Note that the sum of the last term equals 0.

$$(\sigma(\theta))^2 = \sum_{i=1}^{N} (\theta i')^2/N = 2(1-\bar{U}/\bar{S}) - \sum_{i=1}^{N}((\theta i')^2 Si')/N\bar{S}$$

The term, $\Sigma((\theta i')^2 Si')/N\bar{S}$, is 0 if the deviations in speed are uncorrelated with the deviation in direction. This assumption has been verified in tests on wind data by CSI; the Air Resources Laboratory, NOAA, Idaho Falls, ID; and MERDI, Butte, MT. In these tests, the maximum differences in

$$\sigma(\theta) = (\Sigma(\theta i')^2/N)^{\frac{1}{2}} \text{ and } \sigma(\theta) = (2(1 - \bar{U}/\bar{S}))^{\frac{1}{2}}$$

have never been greater than a few degrees.

The final form is arrived at by converting from radians to degrees (57.296 degrees/radian).

$$\sigma(\theta) = (2(1 - \bar{U}/\bar{S}))^{\frac{1}{2}} = 81(1 - \bar{U}/\bar{S})^{\frac{1}{2}}$$

**** 57 EVENT COUNTER PROGRAM ****

FUNCTION

Record the number of counts (or the equivalent value due to an input multiplier other than 1) that occur during a user entered time interval on either Channel 8 or 9. If no input occurs during the time interval, there is no output. This program is designed to record rainfall intensity.

The time period is specified in minutes and has a range of 1-60. Time periods which exceed 60 are automatically defaulted to 60. The time period should divide evenly into 60 since the program automatically synchronizes the period to the even hour.

An ID of either 248 or 249 is output for Channel 8 or 9 respectively, followed by the time and the total counts that occurred.

OUTPUT PROGRAM NUMBER	57
PARAMETER 1	INPUT CHANNEL NUMBER 8 or 9
PARAMETER 2	TIME PERIOD IN MINUTES
OUTPUT GENERATED	3 OR NONE IF NO COUNTS OCCUR
INTERMEDIATE STORAGE	1

**** 58 & 59 SET POINT CONTROLLER -- 4 PORT ****

FUNCTION

Turn on one of the four output ports when a sensor input rises above a set limit, and turn the port off when the sensor input drops below a second limit. The input channel number, output port number, upper, and lower limits are entered as parameters in two consecutive output programs.

The upper and lower limits must be entered as positive, integer numbers between 1 and 8191, i.e., the minimum value for the lower threshold must be equal to or greater than 1. Scale the sensor input channel to locate the decimal. For example, to turn the port on at 28.5° C and off at 26.2° C, use a multiplier of 10 with Input Program 7 for temperature. Enter 285 and 262 as the set points for the output program.

This program can be used up to four times in any or all of the output tables. For example, you could wire up four lights to display a bar graph of temperature using the output program four times with different set points.

FIRST OUTPUT PROGRAM #	58
PARAMETER 1	INPUT CHANNEL NUMBER (0-9)
PARAMETER 2	PORT NUMBER (1-4)
SECOND OUTPUT PROGRAM #	59
PARAMETER 1	UPPER LIMIT (INTEGER NUMBER, 1-8191)
PARAMETER 2	LOWER LIMIT (INTEGER NUMBER, 1-8191)
OUTPUTS GENERATED	0
INTERMEDIATE STORAGE	0

**** 60 TIMED PORT TURN ON ****

FUNCTION

This program turns on any one of the four output ports a user entered number of minutes and seconds before the end of the output interval. A typical use would be to turn on the fan of a ventilated psychrometer for a period of time before an hourly wetbulb reading is taken. The port is turned off at the end of the output interval.

If the CR21 scan rate is one minute, enter only minutes (00 for seconds) into Parameter 1. If the CR21 scan rate is 10 seconds, both minute and second values may be entered into PARAMETER 1, however, the seconds value must be a multiple of 10.

OUTPUT PROGRAM NUMBER	60
PARAMETER 1	MMSS -- TIME BEFORE OUTPUT TO TURN ON PORT IN MINUTES AND SECONDS
PARAMETER 2	PORT NUMBER (1-4)
OUTPUTS GENERATED	0
INTERMEDIATE STORAGE	0

**** 61 STANDARD DEVIATION ****

FUNCTION

Compute the standard deviation of the readings on any input channel using the formula:

$$\sigma_x = ((\Sigma x_i^2 - (\Sigma x_i)^2/n)/n)^{\frac{1}{2}}$$

OUTPUT PROGRAM NUMBER	61
PARAMETER 1	INPUT CHANNEL NUMBER
PARAMETER 2	N.A.
OUTPUTS GENERATED	1
INTERMEDIATE STORAGE	4

**** 62 FIXED DATA ****

FUNCTION

Enter fixed data, usually a station ID number, into final memory. Use this program in the output table with the longest output interval to avoid wasting memory. For example, if the station ID number is 3456, key 3456 into the output table as the first parameter for this output program. The maximum value which can be entered is 6999.

OUTPUT PROGRAM NUMBER	62
PARAMETER 1	DATA TO BE STORED
PARAMETER 2	NOT USED
OUTPUTS GENERATED	1
INTERMEDIATE STORAGE	0

**** 63 TIME OF INPUT PORT CHANGE ****

FUNCTION

This program records the time of each change of state on Input Port 1 or 2. The voltage input levels should be 5 V. with respect to ground. A change of state is defined as the voltage level going from 5 V to 0 V, or 0 V to 5 V. At each scan, the CR21 checks the state of the input ports. If the state has changed since the previous scan, then two outputs are stored in final memory. The first output indicates which input port changed and the direction of change. The second output is the time of change.

The output format is as follows:

```
CONDITION:  Input Port 1 went from HIGH to LOW
OUTPUT:     01 250 02 TIME
CONDITION:  Input Port 1 went from LOW to HIGH
OUTPUT:     01 251 02 TIME
CONDITION:  Input Port 2 went from HIGH to LOW
OUTPUT:     01 252 02 TIME
CONDITION:  Input Port 2 went from LOW to HIGH
OUTPUT:     01 253 02 TIME
```

This program, like any of the programs having intermittent output, should be placed in the output table after programs having a regularly scheduled output. It is possible to have more than one intermittent output program per output table, so long as they appear after the programs having regularly scheduled outputs.

OUTPUT PROGRAM NUMBER	63
PARAMETER 1	INPUT PORT NUMBER
PARAMETER 2	NOT USED
OUTPUTS GENERATED	2 PER 1 CHANGE OF STATE
INTERMEDIATE STORAGE	1

**** 64 FAST OUTPUT (10, 20 30 SEC) ****

FUNCTION

This program, intended for CR21's with a 10 second scan rate, allows the user to get outputs at intervals more frequently than 1 minute (10, 20, or 30 sec only). The program should be entered at the beginning of an output table, and applies to all programs in that table. Each time a FAST OUTPUT takes place, it is preceded by a user-defined output array ID number which must be between 4 and 249 inclusive.

A typical application for this program would be a calibration run where many data points would be required over a short period of time.

OUTPUT PROGRAM NUMBER	64
PARAMETER 1	OUTPUT INTERVAL IN SECONDS (10, 20, or 30)
PARAMETER 2	OUTPUT ARRAY ID (4 TO 249 INCLUSIVE)
OUTPUTS GENERATED	1
INTERMEDIATE STORAGE	0

**** 65 CONDITIONAL OUTPUT ****

FUNCTION

This program causes all following programs in a given output table to be output at a faster rate (user entered) only if input port 1 is high. The output interval, defined by parameter 1, must be in minutes, with a maximum entry of 60. The actual time of the output will always be either on the even hour or a multiple of the entered time interval from the even hour. Each time a conditional output takes place, it is preceded by a user defined output array ID number (parameter 2) which must be between 4 and 249 inclusive, and the time of output.

Conditional output programs and programs that output at the normal Output Table Interval should not be mixed in the same Output Table unless they are independent of the "number of input scans". Any programs involving "averages" are dependent upon the "number of input scans". This requirement stems from the fact that the number of input scans for a given Output Table is reset to zero whenever a conditional output occurs.

The following table shows the output response for an example where the Output Table Interval is 1 hour, the conditional output interval is 5 minutes, and the first program entry is Conditional Output, followed by an Average program. The column labeled "Data Period" refers to the averaging period for the data value output by the Average program.

INPUT PORT 1 ACTIVITY		OUTPUT	
TIME	STATE	TIME	DATA PERIOD
12:00 - 12:17	Low	12:20	12:00 - 12:20
12:17 - 12:33	High	12:25	12:20 - 12:25
12:33 -	Low	12:30	12:25 - 12:30
		13:00	12:30 - 13:00

Output programs which are independent of the number of input scans are not affected.

A typical application of this program would be to make stream flow and water quality measurements only when it is raining.

OUTPUT PROGRAM #	65
PARAMETER 1	CONDITIONAL OUTPUT INTERVAL IN MINUTES
PARAMETER 2	OUTPUT ARRAY ID NUMBER (4-249 INCLUSIVE)
OUTPUTS GENERATED	2
INTERMEDIATE STORAGE	0

**** 66 INTERMEDIATE X - Y ****

FUNCTION

This program outputs the average value of X minus Y where X and Y are specified input channels. As an option, either X or Y can be an integer constant. This is accomplished by entering the desired constant plus 1000 into the appropriate parameter location. If X-Y is negative, then zero is used for the value to be averaged. The result of X-Y is left in pseudo Channel 11 to be operated on by any subsequent output programs. This program is normally used for determining heating, cooling, or growing degree days.

As an application example, this program could be used for outputing the average temperature difference between the output and return of a heating system. Average heat flow could then be output with program 68 where channel 11 is multiplied by a flow sensor reading.

OUTPUT PROGRAM NUMBER	66
PARAMETER 1	CHANNEL X OR K + 1000
PARAMETER 2	CHANNEL Y OR K + 1000
OUTPUTS GENERATED	1
INTERMEDIATE STORAGE	1

**** 67 INTERMEDIATE PORT STATUS ****

FUNCTION

This program outputs the fraction of the output interval time that an input port was high. Also if the port is high or low, a 1 or 0, respectively, is left in pseudo Channel 10 to be operated on by any subsequent programs.

As an example, this program could be used to tell how long a pump was on during an output interval. The value left in channel 10 (1 or 0) can be multiplied by a temperature difference (in channel 11) with Program 68 to output an average value to be used to derive heat transfer.

OUTPUT PROGRAM NUMBER	67
PARAMTER 1	INPUT PORT NUMBER (1 OR 2)
PARAMTER 2	NOT USED
OUTPUTS GENERATED	1
INTERMEDIATE STORAGE	1

**** 68 INTERMEDIATE X * Y ****

FUNCTION

This program outputs the average of X times Y where X and Y are user entered input channels. The result is left in pseudo Channel 10 to be operated on by any subsequent output programs.

With this program in conjunction with Program 55 (HISTOGRAM) a wind power rose could be output. The bin is selected according to wind direction data. Wind speed would be multiplied by itself twice to obtain wind power (wind speed cubed) by using Program 68 twice. The histogram program is entered so that values are weighted by the wind power value taken from Channel 10.

OUTPUT PROGRAM NUMBER	68
PARAMETER 1	CHANNEL NUMBER FOR X
PARAMETER 2	CHANNEL NUMBER FOR Y
OUTPUTS GENERATED	1
INTERMEDIATE STORAGE	1

**** 69 INTERMEDIATE X/Y ****

FUNCTION

This program outputs the average of X divided by Y where X and Y are input scan values. The instantaneous result is left in pseudo Channel 11 to be operated on by any subsequent output programs.

OUTPUT PROGRAM NUMBER	69
PARAMETER 1	CHANNEL NUMBER FOR X
PARAMETER 2	CHANNEL NUMBER FOR Y
OUTPUTS GENERATED	1
INTERMEDIATE STORAGE	1

**** 70 AVERAGE CUBED WIND ****

FUNCTION

Generate the average of the cube of the wind speed samples.To accomodate the large magnitudes generated by the cube function without over-ranging the CR21 output magnitued limit of 6999, two outputs are generated. The first is the average of the cubed wind divided by powers of 10 until it is less than 6999. The second is the exponent of 10 by which the original number was divided.

OUTPUT PROGRAM NUMBER	70
PARAMETER 1	INPUT CHANNEL NUMBER
PARAMETER 2	NOT USED
OUTPUTS GENERATED	
OUTPUT 1	THE AVERAGE CUBED WIND DIVIDED BY 10
OUTPUT 2	THE EXPONENT, X
INTERMEDIATE STORAGE	2

**** 71 VAPOR PRESSURE / VAPOR PRESSURE DEFICIT ****

FUNCTION

This program outputs average vapor pressure and/or average vapor pressure deficit in kilo pascals. The instantaneous values are calculated at each input scan from the air temperature (deg. C) and percent relative humidity and left in pseudo input channels as described below, to be used by subsequent output programs.

$$EA = \%RH/100 * ES$$

$$ED = ES - EA$$

ED = vapor pressure deficit (kPa)
EA = vapor pressure (kPa)
ES = saturation vapor pressure (kPa)
%RH = percent relative humidity

The algorithm for obtaning saturation vapor pressure from air temperature (deg. C) is taken from Lowe, Paul R., 1976: An approximating polynomial for computation of saturation vapor pressure. J Appl. Meteor. 16, 100-103

OUTPUT PROGRAM NUMBER	71
PARAMETER 1	TEMPERATURE INPUT CHANNEL NUMBER
PARAMETER 2	RELATIVE HUMIDITY CHANNEL NUMBER
NEXT OUTPUT PROGRAM NO.	0
PARAMETER 1	1 FOR AVERAGE VAPOR PRESSURE ONLY. INSTANTANEOUS RESULT IN PSEUDO CHANNEL 11
	2 FOR AVERAGE VAPOR PRESSURE DEFICIT ONLY. INSTANTANEOUS RESULT IN PSEUDO CHANNEL 11
	3 FOR AVERAGE VAPOR PRESSURE AND AVERAGE VAPOR PRESSURE DEFICIT. INSTANTANEOUS VAPOR PRESSURE IN PSEUDO CHANNEL 11. INSTANTANEOUS VAPOR PRESSURE DEFICIT IN PSEUDO CHANNEL 10. AVERAGE VAPOR PRESSURE APPEARS FIRST IN FINAL STORAGE.
PARAMETER 2	NOT USED
OUTPUTS GENERATED	1 OR 2
INTERMEDIATE STORAGE	1 OR 2

**** 72-73 GROWING DEGREE DAYS ****

FUNCTION

Compute growing degree days by summing the growing degree day reading from each scan.

Two output programs are used together as if they were one. In the first output program, the sensor's channel number is entered as parameter 1, and any desired initial number of growing degree days (GDD) is entered as parameter 2. The second output program must follow. Parameter 1 is the upper temperature limit and parameter 2 is the lower temperature limit. All parameters must be integer numbers (no decimals).

The output program pair may be used more than once. That is, GDD with two or three different upper and lower limits can be calculated simultaneously.

If any change is made in any output table after the GDD Program has been running; the accumulated GDD will be reset to the initial number keyed in as parameter 1 of the first output program. Make sure you write down the accumulated GDD before changing output tables so that you can enter the total as the new starting value.

The GDD output is calculated by first setting the instantaneous temperature of each scan equal to the upper limit if it is above it, or equal to the lower limit if it is below it. The lower limit is then subtracted from the modified instantaneous temperatue. The growing degree day value calculated is divided by 1440 so that each minute the GDD is summed into an accumulator. This program may be used with any output interval. The day's GDD is added to the season's accumulated GDD, which is then stored in final memory and output.

FIRST OUTPUT PROGRAM #	72
PARAMETER 1	INPUT CHANNEL NUMBER
PARAMETER 2	INITIAL GROWING DEGREE DAYS (INTEGER NUMBER)
SECOND OUTPUT PROGRAM #	73
PARAMETER 1	UPPER TEMPERATURE LIMIT (INTEGER NUMBER)
PARAMETER 2	LOWER TEMPERATURE LIMIT (INTEGER NUMBER)
OUTPUTS GENERATED	1 (ACCUMULATED GDD)
INTERMEDIATE STORAGE	1

S P E C I A L K E Y B O A R D F U N C T I O N S

**** *D MANUAL SCAN ****

FUNCTION

Sample and store in final memory time and all of the analog input channels (1 through 7) upon command from the keyboard. In addition, the user can enter up to a three-digit identifier that is recorded with the input samples.

PROCEDURE

KEY IN	RESULTING DISPLAY	DESCRIPTION
*D	11:	Program waits for identifier
XXX	11:XXX	XXX is any identifier number between 4 and 249
A		Record identifier, time, and initiate an input sample of all analog channels

A P P E N D I X C

APPLICATIONS PROM PROGRAM LIST

P R O M 2 6 6

THE FOLLOWING IS A LIST OF THE INPUT AND OUTPUT PROGRAMS IN YOUR PROM AND THEIR CORRESPONDING PROGRAM NUMBERS. REFER TO APPENDICES A AND B FOR DETAILED DEFINITIONS OF THE INPUT AND OUTPUT PROGRAMS.

INPUT PROGRAM SUMMARY

PROGRAM NUMBER	PROGRAM NAME
1	DC Volts
2	DC Millivolts
3	DC Volts with excitation
4	DC Millivolts with excitation
5	AC Volts with excitation
6	Pulse Counts
7	Temperature (Model 101 Probe)
8	Relative Humidity--(Model 201 Probe)
9	Relative Humidity with selection of comp. temperature channel (Model 201 Probe)
10	Temperature (Model 102 Probe) for 5 deg. C to 95 deg. C range.

OUTPUT PROGRAM SUMMARY

PROGRAM NUMBER	PROGRAM NAME
50	Sample
51	Average
52	Totalize
53	Maximize, Time of Maximum
54	Minimize, Time of Minimum
55	Histogram
56	Windvector
57	Event Counter Program
58-59	Set Point Controller
60	Timed Port Turn On
61	Standard Deviation
62	Fixed Data
63	Time of Input Port Change
64	Fast Output (10 to 30 Sec)

OUTPUT PROGRAM SUMMARY

PROGRAM NUMBER	PROGRAM NAME
65	Conditional Output
66	Intermediate X - Y
67	Intermediate Input Port Status
68	Intermediate X * Y
69	Intermediate X/Y
70	Average Cubed Wind
71	Vapor Pressure / Vapor Pressure Deficit
72-73	Growing Degree Days

SPECIAL KEYBOARD FUNCTION *D Manual Scan

APPENDIX D

CR21 PROMPT SHEET

KEYSTROKE DEFINITION SUMMARY

KEY	ACTION
0-9	Enter numeric data
*	Enter control mode
A	Advance through a program table or data, store displayed number, or execute a control program
B	Begin at the start of the active control mode
C	Change the sign of the number on the display
D	Decimal point
#	Clear entry or abort memory dump

KEYBOARD CONTROL MODE SUMMARY

KEY	MODE
*0	Log data
*1	Output Processing Table 1
*2	Output Processing Table 2
*3	Output Processing Table 3
*4	Input Processing Table
*5	Set day, hour, minute
*6	Monitor current sensor readings
*7	Display stored data
*8	Memory dump to cassette
*9	Memory dump to printer
*D	Manual Scan

INPUT ENTRY FORMAT
Parameter 1: Input Program #
Parameter 2: Multiplier
Parameter 3: Offset

OUTPUT ENTRY FORMAT
Entry 1: Output Program #
Parameter 1: Input Channel
Parameter 2: Optional Modifier

ENTRY FORMAT FOR SETTING DAY, HOUR, MINUTE
91: Julian Day
92: Hour
93: Minute

RECALLED DATA FORMAT

Output Table 1 --
01:000X Output Table (X=#)
02:00JD Julian Day (=JD)
03:HHMM Time (HH=Hours, MM=Minutes)
04: Data Reading
05: Data Reading, etc.

Output Tables 2, 3, and user-defined --
01:000X Output Table
02: Data Reading
03: Data Reading
04: Data Reading, etc.