# 900 MHz, 1 W Spread Spectrum Radio
## Model FGR-115RC

The FGR-115RC radio, manufactured by Freewave, provides general purpose wireless data communications that support point-to-point and point-to-multipoint networks. It can serve as a field radio/modem connected to a datalogger, as a "stand-alone" repeater not connected to a datalogger, or as a base station radio/modem connected to a computer.

The FGR-115RC spreads the normally narrowband information signal over a relatively wide band of frequencies. This process makes communications more immune to noise and interference from RF sources such as pagers, cellular phones, and multipath.[1] User-selectable frequency hopping patterns reduce the radio's susceptibility to RF interference from other spread spectrum devices.

*LEDs on the front of the FGR-115RC indicate when the radio is communicating.*

## Features

- Individual FCC license not required[2]
- Up to 60 mile transmission range (please note that line-of-sight obstructions, RF interference, and antenna type will affect transmission distance)
- Low current drain
- Wide operating temperature range (-40° to +75°C)
- High Speed—up to 115.2 kbps continuous throughput
- High noise immunity—superior performance in noise congested environments
- Error Free Communications—32 bit CRC with automatic retransmission
- Separate diagnostic port—real time remote diagnostics and setup, transparent to network communications.
- Ability to have standalone RF router/repeaters (up to 8 repeaters)

*The back of the FGR-115RC shows the 9-pin, RS-232 connector for attaching a datalogger and the coaxial connector for attaching the antenna cable or 18686 adapter.*

1. *The operating frequency band of this radio may be shared with other non-licensed services such as cordless telephones and with licensed services including emergency, broadcast, and air-traffic control.*
2. *The FGR-115 radios, like all FCC Part 15 devices, are not allowed to cause harmful interference to licensed radio communications and must accept any interference that it receives. Most Campbell Scientific users operate in open or remote locations where interference is unlikely. If there is a problem, interference can be reduced using methods such as moving the device, reorienting or using a different type of antenna, or adding RF shielding.*

## Radios

*Every radio includes one RS-232 cable and one wall charger. For each pair of radios, one diagnostic cable and one CD containing system tools is shipped.*

| | |
|---|---|
| FGR-115RC | 900 MHz, 1 W Spread Spectrum Radio/Modem with RS-232 Connector |

## Antennas and Antenna Accessories

*Omnidirectional antennas are normally used at the base station and nearby stations. Yagi antennas are needed at distant stations or other special cases. Call one of our Applications Engineers for help in choosing an antenna. Only the following FCC approved antennas can be used.*

### Indoor, Omnidirectional

| | |
|---|---|
| 14310 | 0 dBd, ¼ wave whip, straight, 3.2″ length. The antenna has an RPSMA connector that attaches to the radio via the 18686 Adapter. |
| 14204 | 0 dBd, ½ wave whip, jointed, adjustable from 0° to 90°. The antenna has an RPSMA connector that attaches to the radio via the 18686 Adapter. |
| 15970 | 1 dBd, dipole, window/wall mount. The antenna is shipped with a 10 ft RG-174 cable that has an RPSMA connector. The 18686 Adapter is required to connect the RG-174 cable to the radio. |
| 15730 | 0 dBd, ¼ wave whip, right angle, adjustable from 0° to 90°. The antenna has an RPSMA connector that attaches to the radio via the 18686 Adapter. |
| 15731 | 0 dBd, ¼ wave whip, straight, 3″ length. The antenna has an RPSMA connector that attaches to the radio via the 18686 Adapter. |

*The 15970 has adhesive backing to allow it to adhere to a wall, rear-view mirror, or other suitable flat non-conductive surface.*

### Outdoor, Omindirectional

| | |
|---|---|
| 14203 | 3 dBd with cable clamp mounts. The antenna has a Type N female connector that attaches to the radio via the COAXNTN antenna cable |
| 14221 | 3 dBd with rugged FM2 antenna mounts. The antenna has a Type N female connector that attaches to the radio via the COAXNTN antenna cable. |

*The 14203 is suitable for base station use where it needs to communicate with multiple stations located in different directions.*

### Outdoor, Yagi

| | |
|---|---|
| 14201 | 9 dBd, with mounts. The antenna has a Type N female connector that attaches to the radio via the COAXNTN antenna cable. Please note that because the FCC limits EIRP to 36 dBm, use of this antenna may require a reduction of the radio's transmit power (consult Campbell Scientific for more information). |

*The 14201 Yagi antenna is intended for longer transmission distances.*

## Adapter for Indoor Antennas

| | |
|---|---|
| 18686 | RPSMA Female-to-Type N Male Adapter that is required for attaching an indoor antenna to the radio. |

## Antenna Cables and Surge Protectors for Outdoor Antennas

| | |
|---|---|
| COAXNTN-L | Low-loss RG8 antenna cable with type N male to type N male connectors. Specify length, in feet, after the L. |
| 16981 | Surge Suppressor that is recommended when the length of the COAXNTN cable is greater than 50'. The surge suppressor provides the radio with a degree of protection from electrical discharge being conducted down the antenna cable. It connects directly to the COAXNTN antenna cable. |

*The surge protectors help protect the radio from electrical transients conducted through the antenna cable.*

# *Additional Accessories*

| | |
|---|---|
| SC105 | Interface used to connect the FGR-115RC to the CS I/O port on the datalogger. The SC105 includes an SC12 cable that connects the interface to the datalogger and a 10873 cable that connects the interface to the FGR-115RC. |
| 18663 | Null modem cable used to connect the FGR-115RC to the RS-232 port on the datalogger. |
| 18669 | Mounting bracket kit for attaching the radio to the backplate of an environmental enclosure |
| CM230 | Adjustable Angle Mounting Kit for attaching an outdoor antenna to a tripod or tower. |
| 20625 | Freewave Diagnostic cable and CD. Order this if purchasing an odd number of radios (one cable and one CD is shipped with a pair of radios) or as a replacement item. |

*The SC105 interface is used to connect the FGR-115RC to the CS I/O port on the datalogger. This interface is the only option available for connecting the radio to a CR510, CR10X, or CR7 datalogger.*

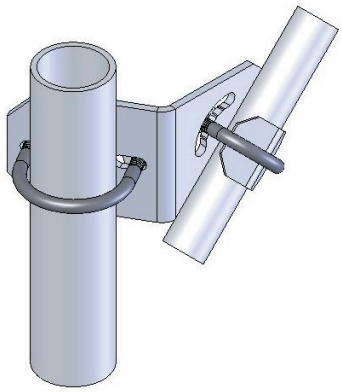

*When using the CM230, fix the declination of the antenna by tightening the u-bolt that mounts on the mast. The inclination is then adjusted with the other set of u-bolts and nuts.*

*The 18663 null modem cable connects the FGR-115RC to the datalogger's RS-232 port. This cable is the only option available for connecting the radio to a CR200 datalogger.*

## Specifications

| | |
|---|---|
| Operating Frequency: | 902-928 MHz |
| Type: | Frequency Hopping Spread Spectrum (FHSS) Transceiver |
| Modulation: | GFSK, 115.2 kbps or 153.6 kbps |
| Hopping Bands: | 7, user selectable |
| Hopping Channels: | 50 to 112, user selectable |
| Frequency Hopping Patterns: | 15 per band, 105 total, user selectable |
| Occupied Bandwidth: | 230 kHz |
| Transmitter Power Output: | 5 mW to 1 W |
| Antenna Connector: | Type N Female |
| Receiver Sensitivity: | -108 dBm for $10^{-6}$ BER<br>-110 dBm for $10^{-4}$ BER |
| Operating Temperature Range: | -40° to +75°C |
| Power: | 6 to 30 Vdc |
| I/O Data Rate: | 38,400 to 115,200 bps |
| RS-232 Connector: | 9-pin "D" DCE |
| Average Current Drain: | 6 mA sleep,<br>21 mA idle,<br>86 mA while receiving<br>500 mA while transmitting |
| Dimensions: | 6.5" L x 2.93" W x 2.23" H (16.5 L x 7.44 W x 5.66 H cm) |
| Weight: | 15.5 oz (441 g) |
| Compatible CSI Products: | CR510, CR10X, CR800, CR850, CR1000, CR3000, CR5000, and CR7 dataloggers; the CR200 is also compatible, but the on-board radio of the CR206, CR211, or CR216 should not be used. Campbell Scientific does not recommend using RF401-series radios in the same network as the FGR-115. |

815 W. 1800 N. | Logan, Utah 84321-1784 | USA | phone (435) 753-2342 | www.campbellsci.com
Australia | Brazil | Canada | England | France | Germany | South Africa | Spain | USA [headquarters]

Copyright © 2006, 2007
Campbell Scientific, Inc.
Printed June 2007