Product Manual

Sensor

MetSENS-Series

Compact Weather Sensors

Revision: 09/2019

RELIABLE SINCE 1974 MONITORING

CAMPBELL SCIENTIFIC

Guarantee

This equipment is guaranteed against defects in materials and workmanship. We will repair or replace products which prove to be defective during the guarantee period as detailed on your invoice, provided they are returned to us prepaid. The guarantee will not apply to:

- Equipment which has been modified or altered in any way without the written permission of Campbell Scientific
- Batteries
- Any product which has been subjected to misuse, neglect, acts of God or damage in transit.

Campbell Scientific will return guaranteed equipment by surface carrier prepaid. Campbell Scientific will not reimburse the claimant for costs incurred in removing and/or reinstalling equipment. This guarantee and the Company's obligation thereunder is in lieu of all other guarantees, expressed or implied, including those of suitability and fitness for a particular purpose. Campbell Scientific is not liable for consequential damage.

Please inform us before returning equipment and obtain a Repair Reference Number whether the repair is under guarantee or not. Please state the faults as clearly as possible, and if the product is out of the guarantee period it should be accompanied by a purchase order. Quotations for repairs can be given on request. It is the policy of Campbell Scientific to protect the health of its employees and provide a safe working environment, in support of this policy a "Declaration of Hazardous Material and Decontamination" form will be issued for completion.

When returning equipment, the Repair Reference Number must be clearly marked on the outside of the package. Complete the "Declaration of Hazardous Material and Decontamination" form and ensure a completed copy is returned with your goods. Please note your Repair may not be processed if you do not include a copy of this form and Campbell Scientific Ltd reserves the right to return goods at the customers' expense.

Note that goods sent air freight are subject to Customs clearance fees which Campbell Scientific will charge to customers. In many cases, these charges are greater than the cost of the repair.

CAMPBELL SCIENTIFIC
WHEN MEASUREMENTS MATTER

Campbell Scientific Ltd,
80 Hathern Road,
Shepshed, Loughborough, LE12 9GX, UK
Tel: +44 (0) 1509 601141
Fax: +44 (0) 1509 270924

Email: support@campbellsci.co.uk
www.campbellsci.co.uk

PLEASE READ FIRST

About this manual

Please note that this manual was originally produced by Campbell Scientific Inc. primarily for the North American market. Some spellings, weights and measures may reflect this origin.

Some useful conversion factors:

Area: 1 in^2 (square inch) = 645 mm^2

Length: 1 in. (inch) = 25.4 mm
1 ft (foot) = 304.8 mm
1 yard = 0.914 m
1 mile = 1.609 km

Mass: 1 oz. (ounce) = 28.35 g
1 lb (pound weight) = 0.454 kg

Pressure: 1 psi (lb/in^2) = 68.95 mb

Volume: 1 UK pint = 568.3 ml
1 UK gallon = 4.546 litres
1 US gallon = 3.785 litres

In addition, while most of the information in the manual is correct for all countries, certain information is specific to the North American market and so may not be applicable to European users.

Differences include the U.S standard external power supply details where some information (for example the AC transformer input voltage) will not be applicable for British/European use. *Please note, however, that when a power supply adapter is ordered it will be suitable for use in your country.*

Reference to some radio transmitters, digital cell phones and aerials may also not be applicable according to your locality.

Some brackets, shields and enclosure options, including wiring, are not sold as standard items in the European market; in some cases alternatives are offered. Details of the alternatives will be covered in separate manuals.

Part numbers prefixed with a "#" symbol are special order parts for use with non-EU variants or for special installations. Please quote the full part number with the # when ordering.

Recycling information

At the end of this product's life it should not be put in commercial or domestic refuse but sent for recycling. Any batteries contained within the product or used during the products life should be removed from the product and also be sent to an appropriate recycling facility.

Campbell Scientific Ltd can advise on the recycling of the equipment and in some cases arrange collection and the correct disposal of it, although charges may apply for some items or territories.

For further advice or support, please contact Campbell Scientific Ltd, or your local agent.

CAMPBELL SCIENTIFIC
WHEN MEASUREMENTS MATTER

Campbell Scientific Ltd, 80 Hathern Road, Shepshed, Loughborough, LE12 9GX,
UK Tel: +44 (0) 1509 601141 Fax: +44 (0) 1509 270924
Email: support@campbellsci.co.uk
www.campbellsci.co.uk

Safety

DANGER — MANY HAZARDS ARE ASSOCIATED WITH INSTALLING, USING, MAINTAINING, AND WORKING ON OR AROUND **TRIPODS, TOWERS, AND ANY ATTACHMENTS TO TRIPODS AND TOWERS SUCH AS SENSORS, CROSSARMS, ENCLOSURES, ANTENNAS, ETC**. FAILURE TO PROPERLY AND COMPLETELY ASSEMBLE, INSTALL, OPERATE, USE, AND MAINTAIN TRIPODS, TOWERS, AND ATTACHMENTS, AND FAILURE TO HEED WARNINGS, INCREASES THE RISK OF DEATH, ACCIDENT, SERIOUS INJURY, PROPERTY DAMAGE, AND PRODUCT FAILURE. TAKE ALL REASONABLE PRECAUTIONS TO AVOID THESE HAZARDS. CHECK WITH YOUR ORGANIZATION'S SAFETY COORDINATOR (OR POLICY) FOR PROCEDURES AND REQUIRED PROTECTIVE EQUIPMENT PRIOR TO PERFORMING ANY WORK.

Use tripods, towers, and attachments to tripods and towers only for purposes for which they are designed. Do not exceed design limits. Be familiar and comply with all instructions provided in product manuals. Manuals are available at www.campbellsci.eu or by telephoning +44(0) 1509 828 888 (UK). You are responsible for conformance with governing codes and regulations, including safety regulations, and the integrity and location of structures or land to which towers, tripods, and any attachments are attached. Installation sites should be evaluated and approved by a qualified engineer. If questions or concerns arise regarding installation, use, or maintenance of tripods, towers, attachments, or electrical connections, consult with a licensed and qualified engineer or electrician.

General

- Prior to performing site or installation work, obtain required approvals and permits. Comply with all governing structure-height regulations, such as those of the FAA in the USA.
- Use only qualified personnel for installation, use, and maintenance of tripods and towers, and any attachments to tripods and towers. The use of licensed and qualified contractors is highly recommended.
- Read all applicable instructions carefully and understand procedures thoroughly before beginning work.
- Wear a **hardhat** and **eye protection**, and take **other appropriate safety precautions** while working on or around tripods and towers.
- **Do not climb** tripods or towers at any time, and prohibit climbing by other persons. Take reasonable precautions to secure tripod and tower sites from trespassers.
- Use only manufacturer recommended parts, materials, and tools.

Utility and Electrical

- **You can be killed** or sustain serious bodily injury if the tripod, tower, or attachments you are installing, constructing, using, or maintaining, or a tool, stake, or anchor, come in **contact with overhead or underground utility lines**.
- Maintain a distance of at least one-and-one-half times structure height, or 20 feet, or the distance required by applicable law, **whichever is greater**, between overhead utility lines and the structure (tripod, tower, attachments, or tools).
- Prior to performing site or installation work, inform all utility companies and have all underground utilities marked.
- Comply with all electrical codes. Electrical equipment and related grounding devices should be installed by a licensed and qualified electrician.

Elevated Work and Weather

- Exercise extreme caution when performing elevated work.
- Use appropriate equipment and safety practices.
- During installation and maintenance, keep tower and tripod sites clear of un-trained or non-essential personnel. Take precautions to prevent elevated tools and objects from dropping.
- Do not perform any work in inclement weather, including wind, rain, snow, lightning, etc.

Maintenance

- Periodically (at least yearly) check for wear and damage, including corrosion, stress cracks, frayed cables, loose cable clamps, cable tightness, etc. and take necessary corrective actions.
- Periodically (at least yearly) check electrical ground connections.

WHILE EVERY ATTEMPT IS MADE TO EMBODY THE HIGHEST DEGREE OF SAFETY IN ALL CAMPBELL SCIENTIFIC PRODUCTS, THE CUSTOMER ASSUMES ALL RISK FROM ANY INJURY RESULTING FROM IMPROPER INSTALLATION, USE, OR MAINTENANCE OF TRIPODS, TOWERS, OR ATTACHMENTS TO TRIPODS AND TOWERS SUCH AS SENSORS, CROSSARMS, ENCLOSURES, ANTENNAS, ETC.

Table of contents

1. Introduction

The MetSENS-series compact weather sensors monitor different combinations of common meteorological parameters to international standards—all in a single, integrated instrument. A variety of output options ensure plug and play operability in a wide variety of applications.

2. Precautions

- READ AND UNDERSTAND the Safety (p. iii) section at the front of this manual.
- Care should be taken when opening the shipping package to not damage or cut the cable jacket. If damage to the cable is suspected, consult with a Campbell Scientific support and implementation engineer.
- Opening the unit or breaking the security seal will void the warranty and the calibration.
- The sensor is a precision instrument. Please handle it with care.
- When installing the unit, handle with lint free gloves and degrease the unit to reduce the build-up of deposits.

3. Initial inspection

Upon receipt of the MetSENS-series sensor, inspect the packaging and contents for damage. File damage claims with the shipping company.

Each MetSENS-series sensor is shipped pre-configured, with a test report and cable. Configuration and cable type depends on the communication mode chosen: SDI-12, Modbus RS-485, or RS-232. The cable length can be 5 m (17 ft), 15 m (50 ft), 46 m (150 ft), or user specified.

Replacement cables are as follows:

- METSENSCBL1 SDI-12 Replacement Cable
- METSENSCBL2 RS-485 Replacement Cable
- METSENSCBL3 RS-232 Replacement Cable

4. QuickStart

A video that describes data logger programming using Short Cut is available at: www.campbellsci.eu/videos/cr1000x-datalogger-getting-started-program-part-3 ▶. Short Cut is an easy way to program your data logger to measure the sensor and assign data logger wiring terminals. Short Cut is available as a download on www.campbellsci.eu. It is included in installations of LoggerNet, PC200W, PC400, or RTDAQ.

The following procedure also shows using Short Cut to program the sensor.

1. Open Short Cut and click **Create New Program**.
2. Double-click the data logger model.
3. In the **Available Sensors and Devices** box, type MetSENS or locate the sensor in the **Sensors** > **Meteorological** > **Basic Weather** > **MetSENS** folder. Double-click the appropriate sensor model and output. Type the correct **SDI-12 Address** (default is zero) or **Modbus Address** (default is 41). If measuring barometric pressure, type the elevation of the site in the same units as the **Site elevation units**. Default units are metres which can be changed by clicking on the **Site elevation units** box and selecting **Feet**.

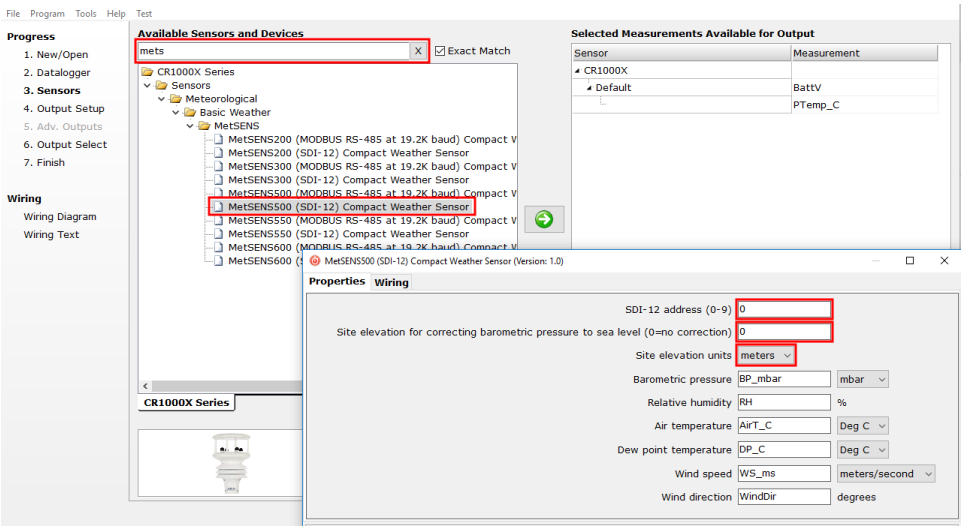

4. Click the **Wiring** tab to see how the sensor is to be wired to the data logger. Click **OK** after wiring the sensor.

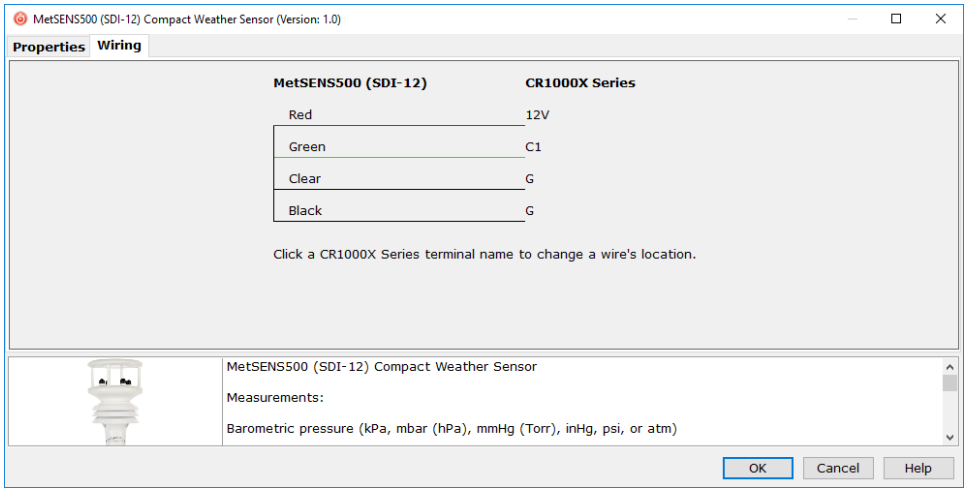

5. Repeat steps three and four for other sensors.

6. In **Output Setup**, type the scan rate, meaningful table names, and **Data Output Storage Interval**.

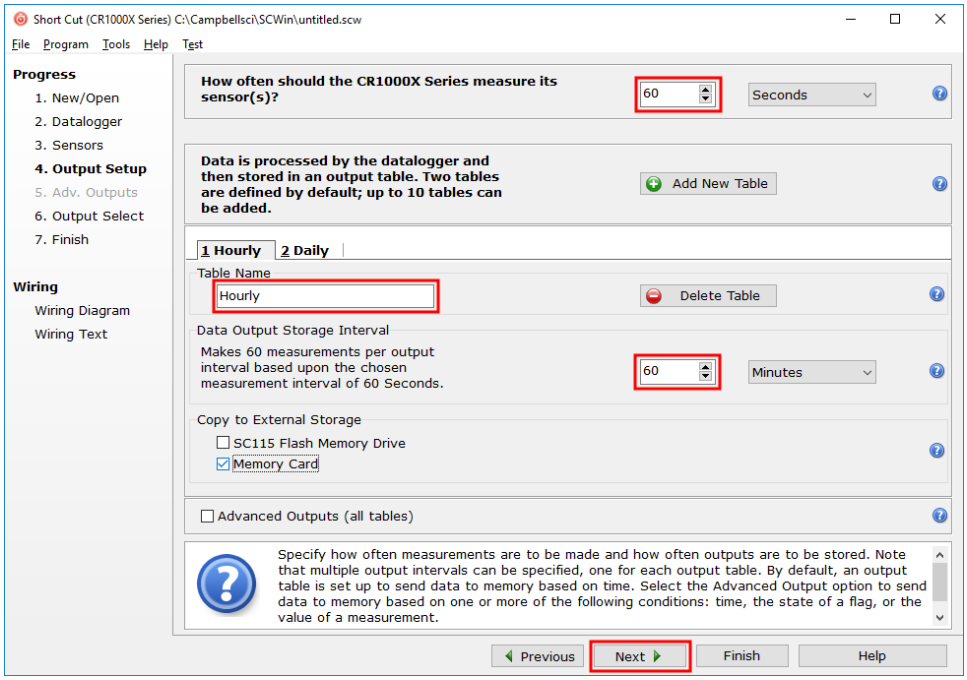

7. Select the measurement and its associated output option.

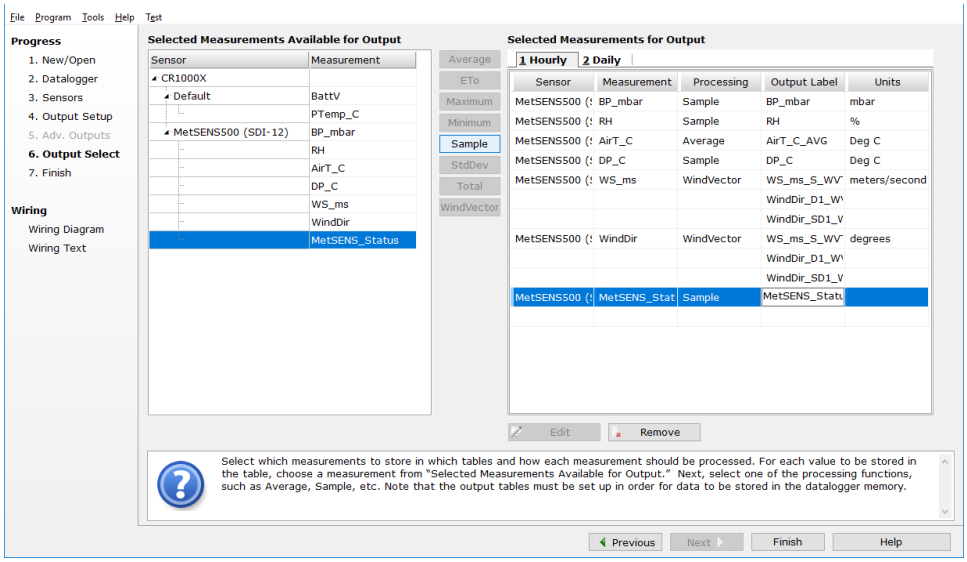

8. Click **Finish** and save the program. Send the program to the data logger if the data logger is connected to the computer.
9. If the sensor is connected to the data logger, check the output of the sensor in the data display in LoggerNet, PC400, RTDAQ, or PC200W to make sure it is making reasonable measurements.

5. Specifications

Sampling rate:	1 Hz
Digital communication modes:	Serial RS-232, RS-485, SDI-12, NMEA, Modbus, ASCII
Default configuration	
RS-485:	19200 baud rate, 8 data bits, even parity, one stop bit; default Modbus address is 41
SDI-12:	Default SDI-12 address is 0
RS-232:	9600 baud rate, 8 data bits, even parity, one stop bit
IP rating:	66
Compliance:	CE, RoHS; compliance documents available at: www.campbellsci.eu/metsens200 www.campbellsci.eu/metsens300 www.campbellsci.eu/metsens500

www.campbellsci.eu/metsens550
www.campbellsci.eu/metsens600

Operating temperature range:	–40 to 70 °C
Operating voltage:	5 to 30 VDC
Typical current drain @ 12 VDC:	25 mA continuous high mode, 0.7 mA eco-power mode (1 hour polled)

Table 5-1: Measurements, weight, and dimensions

Model	Measurements	Weight	Dimensions
MetSENS200	Wind speed Wind direction	0.5 kg (1.1 lb)	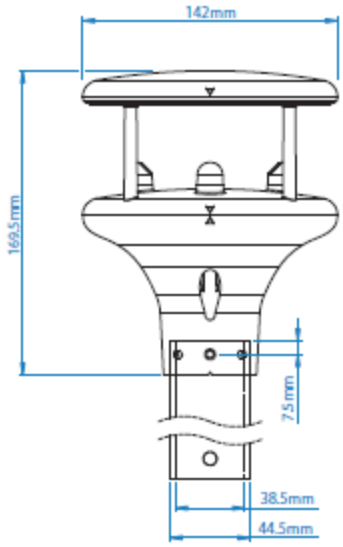
MetSENS300	Air temperature Relative humidity Barometric pressure	0.5 kg (1.1 lb)	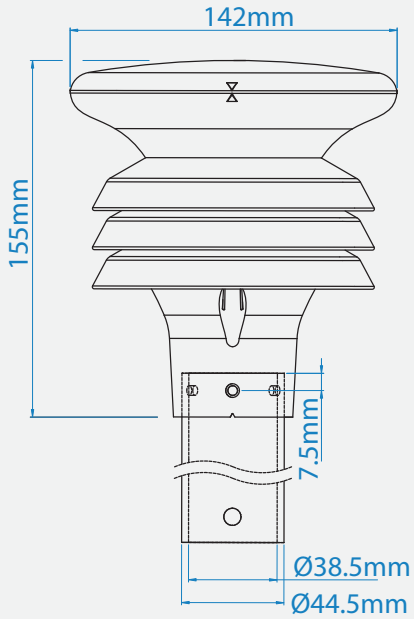

Table 5-1: Measurements, weight, and dimensions			
Model	Measurements	Weight	Dimensions
MetSENS500	Air temperature Relative humidity Barometric pressure Wind speed Wind direction Compass	0.7 kg (1.5 lb)	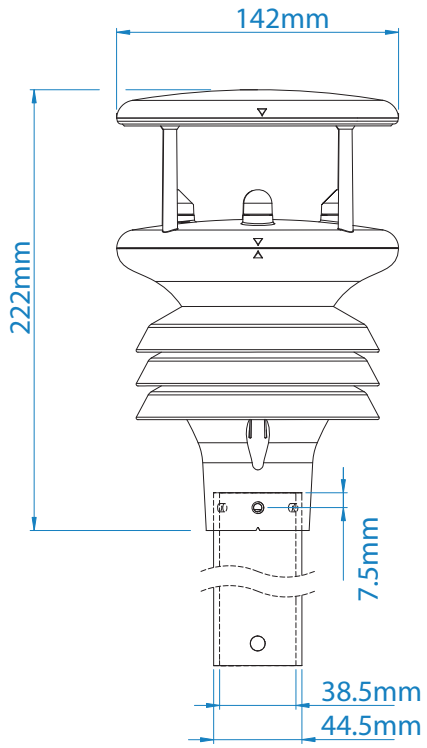
MetSENS550	Air temperature Relative humidity Barometric pressure Wind speed Wind direction Compass Connector for the TE525METS or other rain gauge	0.7 kg (1.5 lb)	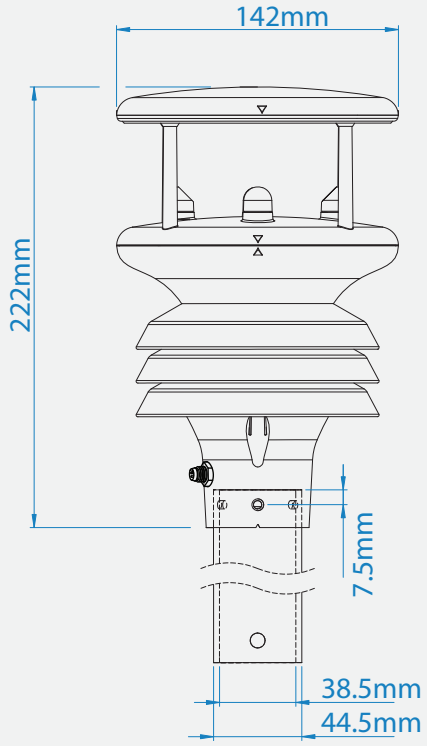

Table 5-1: Measurements, weight, and dimensions			
Model	Measurements	Weight	Dimensions
MetSENS600	Air temperature Relative humidity Barometric pressure Wind speed Wind direction Compass Precipitation (optical)	0.8 kg (1.8 lb)	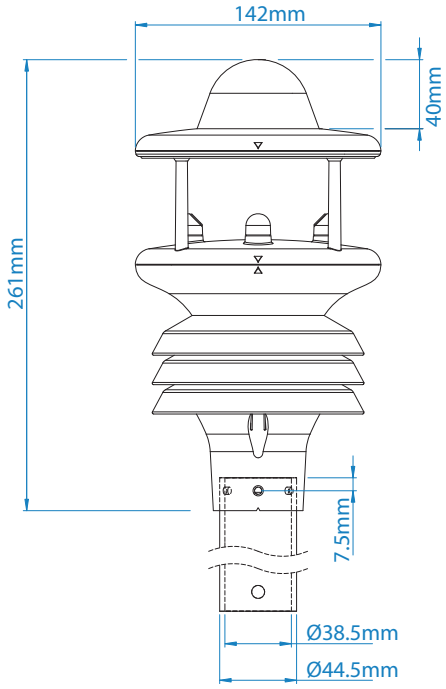

5.1 Air temperature measurement

Measurement range:	–40 to 70 °C
Resolution:	0.1 °C
Accuracy:	±0.3 °C @ +20 °C

5.2 Relative humidity measurements

Measurement range:	0 to 100%
Resolution:	0.1 %
Accuracy:	± 2% @ 20 °C (10 to 90% RH)

5.3 Barometric pressure measurements

Measurement range:	300 to 1100 hPa
Resolution:	0.1 hPa
Accuracy:	±0.5 hPa @ 25 °C

5.4 Wind speed measurements

Measurement range:	0.01 to 60 m s^{-1}
Resolution:	0.01 m s^{-1}
Starting threshold:	0.01 m s^{-1}
Accuracy:	±3% (up to 40 m s^{-1}), ±5% (up to 60 m s^{-1})

5.5 Wind direction measurements

Measurement range:	0° to 359°
Resolution:	1°
Accuracy:	±3° (up to 40 m s^{-1}), ±5° (up to 60 m s^{-1})

5.6 Precipitation input

Measurement input type:	Triggering
Range:	0 to 1000 mm hr^{-1}
Resolution:	from 0.01 mm
Input to MetSENS550:	Contact closure via an M8 male, 4-pin connector. User-supplied 20 m cable or mating female connector required.

5.7 Precipitation measurements

Measurement input type:	Optical
Range:	0 to >300 mm hr^{-1}
Resolution:	0.08 mm
Repeatability:	3%

5.8 Compass

Measurement range:	0 to 359°
Resolution:	1°
Units of measure:	Degrees
Accuracy:	±3°

6. Installation

If you are programming your data logger with Short Cut, skip Wiring (p. 10) and Programming (p. 11). Short Cut does this work for you. See QuickStart (p. 2) for a tutorial.

6.1 Siting considerations for wind measurements

Locate the sensor away from obstructions such as trees and buildings. The horizontal distance from an obstruction should be at least ten times the height of the obstruction. If it is necessary to mount the sensor on the roof of a building, the height of the sensor above the roof, should be at least 1.5 times the height of the building. The sensors should also be mounted away from electrical equipment that generate magnetic fields, which will affect the electronic compass.

The sensor has four notches that need to be aligned to the magnetic north. A declination correction factor can be added to the Magnetic North heading from the wind direction measurement. Map and declination figures in decimal figures can be obtained from www.geosats.com/magdecli.html or www.ngdc.noaa.gov/geomag/declination.shtml.

6.2 Mounting

Two mounting bracket kits are offered for the MetSENS-series sensors. The ClimaVUE50, MetSENS, or WindSonic Mounting Pipe Kit secures the sensor to a crossarm and consists of a mounting tube, three pan truss screws, CM220 Right Angle Mounting bracket, two U-bolts, and four nuts. The MetSENS or WINDSONIC Stand Mount secures the sensor to either a vertical pole or a horizontal crossarm. It consists of a mounting stand, three pan screws, a plate, two carriage screws, two washers, two lock washers, and two wing nuts.

> NOTE:
> When installing the unit, handle with lint free gloves and degrease the unit to reduce the build-up of deposits.

Mounting procedure:

1. If using the mounting pipe kit, thread the connector end of the cable through the tubing; start at the end without the three threaded holes.
2. Attach the cable connector to the mating connector located on the bottom of the sensor.
3. Use the three pan screws to secure the sensor to the tubing or mounting stand.

4. If applicable, mount the crossarm to the tripod or tower.
5. If using the pipe kit, mount the tubing to the crossarm with the CM220 Right Angle Mounting bracket, U-bolts, and nuts. If using the stand mount, secure the mounting stand to the pole or crossarm with the plate, carriage screws, washers, lock washers, and wing nuts.
6. If measuring wind direction, ensure that the four notches on the sensor are aligned to the magnetic north (see www.geosats.com/magdecli.html or www.ngdc.noaa.gov/geomag/declination.shtml).
7. If using the MetSENS600, level the rain sensor both horizontally and vertically level by using a torpedo level.
8. Route the cable down the crossarm and tripod or pole to the instrument enclosure.
9. Secure the cable to the crossarm and tripod or pole by using cable ties.

6.3 Wiring

If you are programming your data logger with Short Cut, skip this section. Short Cut does this work for you. See QuickStart (p. 2) for a tutorial.

6.3.1 RS-485 wiring

The RS-485 output can be directly read by a MeteoPV, CR6, CR1000X, or Modbus RTU RS-485 network (Table 6-1 (p. 10)). Other Campbell Scientific data loggers can use an MD485 multidrop interface to read the RS-485 output. Refer to the MD485 manual for more information. The Modbus address must be unique and may need to be changed if another sensor on the bus has the same address. Contact Campbell Scientific technical support for assistance changing MB address.

Table 6-1: RS-485 pin-out, wire colour, function, and data logger connection

Wire colour	Pin-out	Function	Data logger[1] connection
Green	5, 7	RS-485 A-	**A-**, **C** (odd)
White	4, 6	RS-485 B+	**B+**, **C** (even)
Red	2	12 VDC	**12V**
Black	3, 1	Power and signal ground	**G**
Clear	NC	Shield	⏚ (analogue ground)

[1]Assumes the sensor directly connects to the data logger.

6.3.2 SDI-12 wiring

Table 6-2 (p. 11) provides wiring and pin-out information when using a MetSENS-series sensor with an SDI-12 output.

Table 6-2: SDI-12 pin-out, wire colour, function, and data logger connection

Wire colour	Pin-out	Function	Data logger connection
Green	9	SDI-12 signal	**C**, **SDI-12**, or **U** configured for SDI-12[1]
Red	2	Power	**12V**
Black	3, 1	Power and signal ground	⏚ (analogue ground)
Clear	NC	Shield	⏚ (analogue ground)

[1]**U** and **C** terminals are automatically configured by the measurement instruction.

For the CR6 and CR1000X data loggers, triggering conflicts may occur when a companion terminal is used for a triggering instruction such as `TimerInput()`, `PulseCount()`, or `WaitDigTrig()`. For example, if this product is connected to **C3** on a CR1000X, **C4** cannot be used in the `TimerInput()`, `PulseCount()`, or `WaitDigTrig()` instructions.

6.3.3 RS-232 wiring

The RS-232 output can be directly read by a CR6 or CR1000X data logger (Table 6-3 (p. 11).

Table 6-3: RS-232 pin-out, wire colour, function, and data logger connection

Wire Colour	Pin-out	Function	Data logger[1] connection
Green	7	RS-232 RXD	**C** (odd)
White	5	RS-232 TXD	**C** (even)
Red	2	12 VDC	**12V**
Black	3, 1	Power and signal ground	**G**
Clear	NC	Shield	⏚ (analogue ground)

[1]Assumes the sensor directly connects to the data logger.

6.4 Programming

Short Cut is the best source for up-to-date programming code for Campbell Scientific data loggers. If your data acquisition requirements are simple, you can probably create and maintain a

data logger program exclusively with Short Cut. If your data acquisition needs are more complex, the files that Short Cut creates are a great source for programming code to start a new program or add to an existing custom program.

> NOTE:
> Short Cut cannot edit programs after they are imported and edited in CRBasic Editor.

A Short Cut tutorial is available in QuickStart (p. 2). If you wish to import Short Cut code into CRBasic Editor to create or add to a customized program, follow the procedure in Importing Short Cut code into CRBasic Editor (p. 19). Programming basics for CRBasic data loggers are provided in the following section. Downloadable example programs are available at:

www.campbellsci.eu/downloads/metsens200-example-programs
www.campbellsci.eu/downloads/metsens300-example-programs
www.campbellsci.eu/downloads/metsens500-example-programs
www.campbellsci.eu/downloads/metsens550-example-programs
www.campbellsci.eu/downloads/metsens600-example-programs

6.4.1 RS-485 programming

The RS-485 output can be directly read by a CR6-series, CR1000X-series, or Modbus RTU RS-485 network. Other Campbell Scientific data loggers can use an MD485 multidrop interface to read the RS-485 output. Refer to the MD485 manual for information about using the MD485.

A CR6 or CR1000X data logger programmed as a Modbus Master can retrieve the values stored in the Input Registers. To do this, the CRBasic program requires a `SerialOpen()` instruction followed by the `ModbusMaster()` instruction.

The `SerialOpen` instruction has the following syntax:

```
SerialOpen (ComPort, Baud, Format, TXDelay, BufferSize, Mode)
```

The `Format` parameter is typically set to logic 1 low; even parity, one stop bit, 8 data bits. The `Mode` parameter should configure the ComPort as RS-485 half-duplex, transparent.

The `ModbusMaster()` instruction has the following syntax:

```
ModbusMaster (Result, ComPort, Baud, Addr, Function, Variable, Start, Length,
Tries, TimeOut, [ModbusOption])
```

The `Addr` parameter must match the sensor Modbus address. To collect all of the values, the `Start` parameter needs to be 1 and the `Length` parameter needs to correspond with the sensor type. `ModbusOption` is an optional parameter described in the CRBasic Editor Help.

6.4.1.1 Modbus measurements

The Modbus register map differs depending on the sensor model you are using.

Table 6-4: MetSENS200 RS-485 registers

Starting register number	Register count	Data format	Label	Units	Description
40001	2	FLOAT	DIR	°	Current, uncorrected wind direction
40003	2	FLOAT	SPEED	m/s	Current wind speed
40005	2	FLOAT	COMPASSH	°	Compass heading of north mark
40007	2	FLOAT	VOLT	VDC	Supply voltage
40009	2	FLOAT	AVGDIR	°	5 min. average wind direction, updated every 30 s
40011	2	FLOAT	AVGSPEED	m/s	5 min. average wind speed, updated every 30 s
40013	2	FLOAT	GDIR	°	Direction of wind gust
40015	2	FLOAT	GSPEED	m/s	3 s wind gust, updated every 30 s
40017	2	UNIT32	STATUS		Sensor status code

Table 6-5: MetSENS300 RS-485 registers

Starting register number	Register count	Data format	Label	Units	Description
40001	2	FLOAT	PRESS	hPa	Barometric pressure
40003	2	FLOAT	RH	%	Relative humidity
40005	2	FLOAT	TEMP	°C	Air temperature
40007	2	FLOAT	DEWPOINT	°C	Dewpoint
40009	2	FLOAT	VOLT	VDC	Supply voltage
40011	2	UNIT32	STATUS		Sensor status code

Table 6-6: MetSENS500 RS-485 registers					
Starting register number	Register count	Data format	Label	Units	Description
40001	2	FLOAT	DIR	°	Current, uncorrected wind direction
40003	2	FLOAT	SPEED	m/s	Current wind speed
40005	2	FLOAT	COMPASSH	°	Compass heading of north mark
40007	2	FLOAT	PRESS	hPa	Barometric pressure
40009	2	FLOAT	RH	%	Relative humidity
40011	2	FLOAT	TEMP	°C	Air temperature
40013	2	FLOAT	DEWPOINT	°C	Dewpoint
40015	2	FLOAT	VOLT	VDC	Supply voltage
40017	2	FLOAT	AVGDIR	°	5 min. average wind direction, updated every 30 s
40019	2	FLOAT	AVGSPEED	m/s	5 min. average wind speed, updated every 30 s
40021	2	FLOAT	GDIR	°	Direction of wind gust
40023	2	FLOAT	GSPEED	m/s	3 s wind gust, updated every 30 s
40025	2	UNIT32	STATUS		Sensor status code

Table 6-7: MetSENS550/MetSENS600 RS-485 registers					
Starting register number	Register count	Data format	Label	Units	Description
40001	2	FLOAT	DIR	°	Current, uncorrected wind direction
40003	2	FLOAT	SPEED	m/s	Current wind speed
40005	2	FLOAT	COMPASSH	°	Compass heading of north mark

Table 6-7: MetSENS550/MetSENS600 RS-485 registers					
Starting register number	Register count	Data format	Label	Units	Description
40007	2	FLOAT	PRESS	hPa	Barometric pressure
40009	2	FLOAT	RH	%	Relative humidity
40011	2	FLOAT	TEMP	°C	Air temperature
40013	2	FLOAT	DEWPOINT	°C	Dewpoint
40015	2	FLOAT	VOLT	VDC	Supply voltage
40017	2	FLOAT	AVGDIR	°	5 min. average wind direction, updated every 30 s
40019	2	FLOAT	AVGSPEED	m/s	5 min. average wind speed, updated every 30 s
40021	2	FLOAT	GDIR	°	Direction of wind gust
40023	2	FLOAT	GSPEED	m/s	3 s wind gust, updated every 30 s
40025	2	FLOAT	PRECIPT	mm	Total accumulated precipitation since powerup
40027	2	UNIT32	STATUS		Sensor status code

6.4.2 SDI-12 programming

The `SDI12Recorder()` instruction is used to measure a MetSENS-series configured for SDI-12 measurements. This instruction sends a request to the sensor to make a measurement and then retrieves the measurement from the sensor. See SDI-12 measurements (p. 16) for more information.

For most data loggers, the `SDI12Recorder()` instruction has the following syntax:

```
SDI12Recorder(Destination, SDIPort, SDIAddress, “SDICommand”, Multiplier,
Offset, FillNAN, WaitonTimeout)
```

For the `SDIAddress`, alphabetical characters need to be enclosed in quotes (for example, “A”). Also enclose the `SDICommand` in quotes as shown. The `Destination` parameter must be an array. The required number of values in the array depends on the command (see Table 6-8 (p. 16)).

`FillNAN` and `WaitonTimeout` are optional parameters (refer to CRBasic Help for more information).

6.4.2.1 SDI-12 measurements

The Metsens-series sensors respond to the SDI-12 commands shown in Table 6-8 (p. 16). Because of the delays the `M!` commands require, Campbell Scientific recommends measurement scans of at least 10 seconds. The `MC!` commands are the same as the the `M!` commands except a cyclic redundancy check (CRC) is included.

Table 6-8: SDI-12 commands and values returned[1]

SDI-12 command (*a* is the SDI-12 address)	Values returned	Units
a`M!` or *a*`MC!`	1. Address (0 through 9) 2. Relative wind direction 3. Relative wind speed 4. Corrected wind direction 5. Corrected wind speed 6. Status (4-digit code)	1. n/a 2. ° 3. m/s 4. ° 5. m/s 6. n/a
a`M1!` or *a*`MC1!`	1. Address (0 through 9) 2. Temperature 3. Dew point 4. Barometric pressure 5. Status (4-digit code) 6. Wind chill 7. Heat index 8. Air density 9. Wet bulb temperature	1. n/a 2. °C 3. °C 4. hPa 5. n/a 6. °C 7. °C 8. kg/m^2 9. °C
a`M!2` or *a*`MC2!`	1. Address (0 through 9) 2. Relative wind direction 3. Relative wind speed 4. Status (4-digit code)	1. n/a 2. ° 3. m/s 4. n/a
a`M!3` or *a*`MC3!`	1. Address (0 through 9) 2. Precipitation intensity 3. Total precipitation intensity 4. Status (4-digit code)	1. n/a 2. mm/hr 3. mm/hr 4. n/a

Table 6-8: SDI-12 commands and values returned[1]		
SDI-12 command (*a* is the SDI-12 address)	Values returned	Units
*a*M6 ! or *a*MC6 !	1. Address (0 through 9) 2. Year 3. Month 4. Day 5. Hour 6. Seconds 7. Status (4-digit code)	
*a*M7 ! or *a*MC7 !	1. Address (0 through 9) 2. Sunrise time 3. Solar noon time 4. Sunset time 5. Position of the sun, azimuth 6. Position of the sun, elevation 7. Twilight, civil 8. Twilight, nautical 9. Twilight, astronomical 10. Status (4-digit code)	1. n/a 2. h:min 3. h:min 4. h:min 5. ° 6. m 7. h:min 8. h:min 9. h:min 10. n/a
? !	Returns the SDI-12 Address	
[1]Not all outputs are available for all sensors.		

6.4.3 RS-232 programming

The RS-232 instructions are shown in Table 6-9 (p. 18).

Table 6-9: Serial instructions

Instruction	Function
`SerialOpen()`	Set up a data logger terminal for serial communications.
`SerialFlush()`	Clears the buffer.
`Scan()`	Establish a scan rate.
`SerialOut()`	Send command to the sensor.
`SerialIn()`	Set up the COM terminal to receive the incoming serial data. Please note that in the beginning of the CRBasic program, the variable used in the `SerialIn()` instruction needs to be declared as an ASCII string format.
`SplitStr()`	Split out digital count value from the input string.

Appendix A. Importing Short Cut code into CRBasic Editor

Short Cut creates a .DEF file that contains wiring information and a program file that can be imported into the CRBasic Editor. By default, these files reside in the C:\campbellsci\SCWin folder.

Import Short Cut program file and wiring information into CRBasic Editor:

1. Create the Short Cut program following the procedure in QuickStart (p. 2). After saving the Short Cut program, click the **Advanced** tab then the **CRBasic Editor** button. A program file with a generic name will open in CRBasic. Provide a meaningful name and save the CRBasic program. This program can now be edited for additional refinement.

   > NOTE:
   > Once the file is edited with CRBasic Editor, Short Cut can no longer be used to edit the program it created.

2. To add the Short Cut wiring information into the new CRBasic program, open the .DEF file located in the C:\campbellsci\SCWin folder, and copy the wiring information, which is at the beginning of the .DEF file.
3. Go into the CRBasic program and paste the wiring information into it.
4. In the CRBasic program, highlight the wiring information, right-click, and select **Comment Block**. This adds an apostrophe (') to the beginning of each of the highlighted lines, which instructs the data logger compiler to ignore those lines when compiling. The **Comment Block** feature is demonstrated at about 5:10 in the CRBasic | Features video.

Appendix B. SDI-12 sensor support

SDI-12, Serial Data Interface at 1200 baud, is a protocol developed to simplify sensor and data logger compatibility. Only three wires are necessary — serial data, ground, and 12 V. With unique addresses, multiple SDI-12 sensors can connect to a single SDI-12 terminal on a Campbell Scientific data logger.

This appendix discusses the structure of SDI-12 commands and the process of querying SDI-12 sensors. For more detailed information, refer to version 1.4 of the SDI-12 protocol, available at www.sdi-12.org.

For additional information, refer to the SDI-12 Sensors | Transparent Mode and SDI-12 Sensors | Watch or Sniffer Mode videos.

B.1 SDI-12 command basics

SDI-12 commands have three components:

- **Sensor address (a)** – a single character and the first character of the command. Use the default address of zero (0) unless multiple sensors are connected to the same port.
- **Command body** – an upper case letter (the "command"), optionally followed by one or more alphanumeric qualifiers.
- **Command termination (!)** – an exclamation mark.

An active sensor responds to each command. Responses have several standard forms and always terminate with <CR><LF> (carriage return and line feed). Standard SDI-12 commands are listed in Table B-1 (p. 20).

Table B-1: Campbell Scientific sensor SDI-12 command and response set

Name	Command	Response[1]
Acknowledge Active	a!	a<CR><LF>
Send Identification	aI!	allcccccccmmmmmmmvvvxxx...xx <CR><LF>
Start Verification	aV!	atttn <CR><LF>
Address Query	?!	a<CR><LF>

Table B-1: Campbell Scientific sensor SDI-12 command and response set		
Name	Command	Response[1]
Change Address	`aAb!`	b<CR><LF>
Start Measurement	`aM!` `aM1!...aM9!`	atttn<CR><LF>
Start Measurement and Request CRC	`aMC!` `aMC1!...aMC9!`	atttn <CR><LF>
Start Concurrent Measurement	`aC!` `aC1!...aC9!`	atttnn<CR><LF>
Start Concurrent Measurement and Request CRC	`aCC!` `aCC1!...aCC9!`	atttnn<CR><LF>
Send Data	`aD0!...aD9!`	a<values><CR><LF> or a<values><CRC><CR><LF>
Continuous Measurement	`aR0!...aR9!`	a<values><CR><LF>
Continuous Measurement and Request CRC	`aRC0!...aRC9!`	a<values><CRC><CR><LF>
Extended Commands	`aXNNN!`	a<values><CR><LF>
[1] Information on each of these commands is given in the following sections.		

B.1.1 Acknowledge active command (a!)

The Acknowledge Active command (`a!`) is used to test a sensor on the SDI-12 bus. An active sensor responds with its address.

B.1.2 Send identification command (al!)

Sensor identifiers are requested by issuing command `aI!`. The reply is defined by the sensor manufacturer but usually includes the sensor address, SDI-12 version, manufacturer's name, and sensor model information. Serial number or other sensor specific information may also be included.

`aI!`	allcccccccmmmmmmvvvxxx...xx<CR><LF>
a	Sensor SDI-12 address
ll	SDI-12 version number (indicates compatibility)
cccccccc	8-character vendor identification

mmmmmm	6 characters specifying the sensor model
vvv	3 characters specifying the sensor version (operating system)
xxx...xx	Up to 13 optional characters used for a serial number or other specific sensor information that is not relevant for operation of the data logger
<CR><LF>	Terminates the response
Source: *SDI-12: A Serial-Digital Interface Standard for Microprocessor-Based Sensors* (see References).	

B.1.3 Start verification command (aV!)

The response to a Start Verification command can include hardware diagnostics, but like the `aI!` command, the response is not standardized.

Command: `aV!`

Response: *atttn<CR><LF>*

a = sensor address

ttt = time, in seconds, until verification information is available

n = the number of values to be returned when one or more subsequent `D!` commands are issued

B.1.4 Address query command (?!)

Command `?!` requests the address of the connected sensor. The sensor replies to the query with the address, *a*. This command should only be used with one sensor on the SDI-12 bus at a time.

B.1.5 Change address command (aAb!)

Multiple SDI-12 sensors can connect to a single SDI-12 terminal on a data logger. Each device on a single terminal must have a unique address.

A sensor address is changed with command `aAb!`, where *a* is the current address and *b* is the new address. For example, to change an address from *0* to *2*, the command is `0A2!`. The sensor responds with the new address *b*, which in this case is 2.

> NOTE:
> Only one sensor should be connected to a particular terminal at a time when changing addresses.

B.1.6 Start measurement commands (aM!)

A measurement is initiated with the `M!` command. The response to each command has the form *atttn<CR><LF>*, where

a = sensor address

ttt = time, in seconds, until measurement data is available. When the data is ready, the sensor notifies the data logger, and the data logger begins issuing D commands.

n = the number of values returned when one or more subsequent D commands are issued. For the aM! command, n is an integer from 0 to 9.

When the aM! is issued, the data logger pauses its operation and waits until either it receives the data from the sensor or the time, *ttt*, expires. Depending on the scan interval of the data logger program and the response time of the sensor, this may cause skipped scans to occur. In this case make sure your scan interval is longer than the longest measurement time (*ttt*).

Table B-2: Example aM! sequence	
0M!	The data logger makes a request to sensor 0 to start a measurement.
00352<CR><LF>	Sensor 0 immediately indicates that it will return two values within the next 35 seconds.
0<CR><LF>	Within 35 seconds, sensor 0 indicates that it has completed the measurement by sending a service request to the data logger.
0D0!	The data logger immediately issues the first D command to collect data from the sensor.
0+.859+3.54<CR><LF>	The sensor immediately responds with the sensor address and the two values.

B.1.7 Start measurement commands with cyclic redundancy check (aMC! and aCC!)

Error checking is done by using measurement commands with cyclic redundancy checks (aMC! or aCC!). This is most commonly implemented when long cable lengths or electronic noise may impact measurement transmission to the data logger. When these commands are used, the data returned in response to D or R commands must have a cyclic redundancy check (CRC) code appended to it. The CRC code is a 16-bit value encoded within 3 characters appended before the <CR><LF>. This code is not returned in the data table but checked by the data logger as it comes. The code returned is based on the SDI-12 protocol. See the SDI-12 communication specification for version 1.3 available at www.sdi-12.org to learn more about how the CRC code is developed.

B.1.8 Stopping a measurement command

A measurement command (`M!`) is stopped if it detects a break signal before the measurement is complete. A break signal is sent by the data logger before most commands.

A concurrent measurement command (`C!`) is aborted when another valid command is sent to the sensor before the measurement time has elapsed.

B.1.9 Send data command (aD0! … aD9!)

The Send Data command requests data from the sensor. It is issued automatically with every type of measurement command (`aM!`, `aMC!`, `aC!`, `aCC!`). When the measurement command is a`M!` or a`MC!`, the data logger issues the `aD0!` command once a service request has been received from the sensor or the reported time has expired. When the data logger is issuing concurrent commands (`aC!` or `aCC!`), the Send Data command is issued after the required time has elapsed (no service request will be sent by the sensor). In transparent mode (SDI-12 transparent mode (p. 24)), the user asserts this command to obtain data.

Depending on the type of data returned and the number of values a sensor returns, the data logger may need to issue `aD0!` up to `aD9!` to retrieve all data. A sensor may return up to 35 characters of data in response to a `D` command that follows an `M!` or `MC!` command. A sensor may return up to 75 characters of data in response to a `D` command that follows a `C!` or `CC!` command. Data values are separated by plus or minus signs.

Command: `aD0!` (`aD1!` … `aD9!`)

Response: *a*<*values*><*CR*><*LF*> or *a*<*values*><*CRC*><*CR*><*LF*>

where:

a = the sensor address

<*values*> = values returned with a polarity sign (+ or –)

<*CR*><*LF*> = terminates the response

<*CRC*> = 16-bit CRC code appended if data was requested with a`MC!` or `aCC!`.

B.2 SDI-12 transparent mode

System operators can manually interrogate and enter settings in probes using transparent mode. Transparent mode is useful in troubleshooting SDI-12 systems because it allows direct communication with probes. Data logger security may need to be unlocked before activating the transparent mode.

Transparent mode is entered while the computer is communicating with the data logger through a terminal emulator program. It is accessed through Campbell Scientific data logger support

software or other terminal emulator programs. Data logger keyboards and displays cannot be used.

The terminal emulator is accessed by navigating to the **Datalogger** list in PC200W, the **Tools** list in PC400, or the **Datalogger** list in the **Connect** screen of LoggerNet.

Watch the video: SDI-12 Sensors | Transparent Mode.

Data loggers from other manufacturers will also have a transparent mode. Refer to those manuals on how to use their transparent mode.

The following examples show how to enter transparent mode and change the SDI-12 address of an SDI-12 sensor. The steps shown in Changing an SDI-12 address (p. 25) are used with most Campbell Scientific data loggers. Changing an SDI-12 address — CR200(X) Series (p. 26) lists the steps used for CR200(X)-series data loggers.

B.2.1 Changing an SDI-12 address

This example was done with a CR1000, but the steps are only slightly different for CR1000X-series, CR300-series, CR6-series, CR800-series, and CR3000 data loggers. For CR200(X)-series data loggers, see Changing an SDI-12 address — CR200(X) Series (p. 26).

1. Connect an SDI-12 sensor to the CR1000.
2. In **LoggerNet Connect**, under **Datalogger**, click **Terminal Emulator**. The terminal emulator window opens.
3. Under **Select Device**, located in the lower left side of the window, select the **CR1000** station.
4. Click **Open Terminal**.
5. Select **All Caps Mode**.
6. Press Enter until the data logger responds with the **CR1000>** prompt.
7. Type **SDI12** and press Enter.
8. At the **Select SDI12 Port** prompt, type the number corresponding to the control port where the sensor is connected and press Enter. The response **Entering SDI12 Terminal** indicates that the sensor is ready to accept SDI-12 commands.
9. To query the sensor for its current SDI-12 address, type **?!** and press Enter. The sensor responds with its SDI-12 address. If no characters are typed within 60 seconds, the mode is exited. In that case, simply type **SDI12** again, press Enter, and type the correct control port number when prompted.

10. To change the SDI-12 address, type **aAb!**, where **a** is the current address from the previous step and **b** is the new address (see FIGURE B-1 (p. 26). Press **Enter**. The sensor changes its address and responds with the new address.
11. To exit SDI-12 transparent mode, click **Close Terminal**.

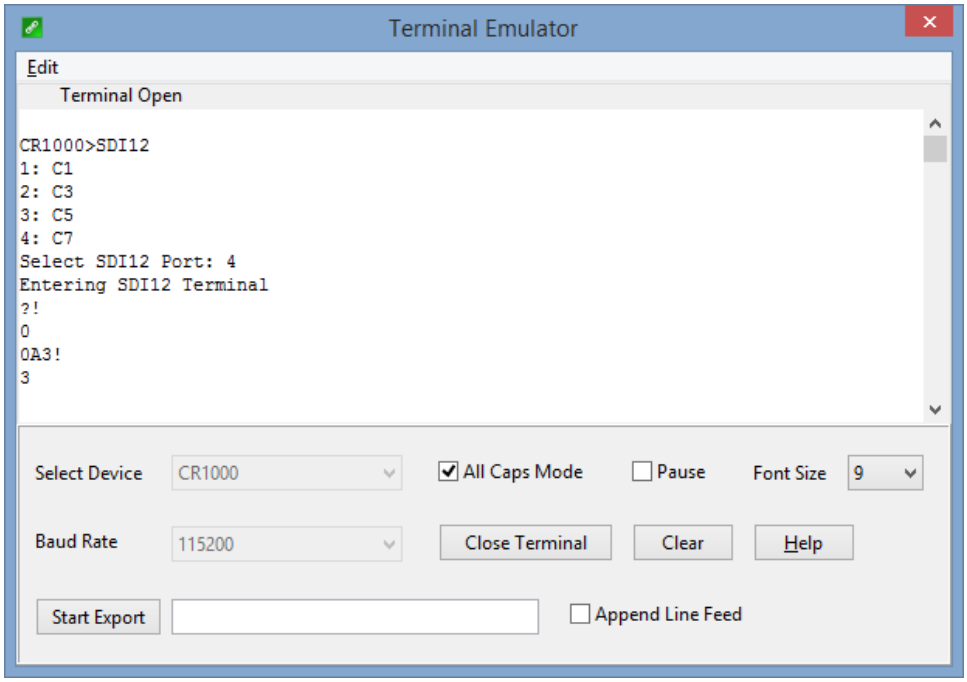

FIGURE B-1. CR1000 example of using the SDI-12 transparent mode to change the SDI-12 address from 0 to 3. Sensor is connected to control port 1.

> **NOTE:**
> The transparent mode for the CR1000X, CR6, and CR300-series data loggers is similar to that shown for the CR1000.

B.2.2 Changing an SDI-12 address — CR200(X) Series

1. Connect a single SDI-12 sensor to the CR200(X).
2. In **LoggerNet Connect**, under **Datalogger**, click **Terminal Emulator**. The terminal emulator window opens.
3. Under **Select Device**, located in the lower left side of the window, select the **CR200Series** station.
4. Click **Open Terminal**.
5. Select **All Caps Mode**.

6. Press Enter until the data logger responds with the **CR2XX>** prompt.
7. Type **SDI12** and press Enter.
8. The response **SDI12>** indicates that the sensor is ready to accept SDI-12 commands.
9. To query the sensor for its current SDI-12 address, type **?!** and press Enter. The sensor responds with its SDI-12 address. If no characters are typed within 60 seconds, the mode is exited. In that case, simply type **SDI12** again and press Enter.
10. To change the SDI-12 address, type **aAb!**, where **a** is the current address from the previous step and **b** is the new address (see FIGURE B-2 (p. 27)). Press **Enter**. The sensor changes its address and responds with the new address.
11. To exit SDI-12 transparent mode, click **Close Terminal**.

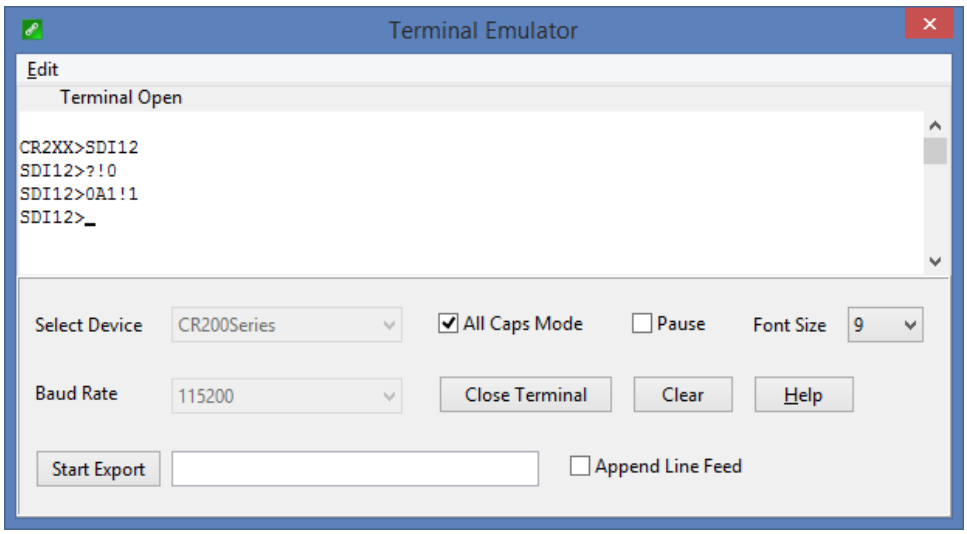

FIGURE B-2. CR200(X) example of using the SDI-12 transparent mode to change the SDI-12 address from 0 to 1

CAMPBELL SCIENTIFIC
WHEN MEASUREMENTS MATTER

Global Sales & Support Network

A worldwide network to help meet your needs

Australia
Location: Garbutt, QLD Australia
Phone: 61.7.4401.7700
Email: info@campbellsci.com.au
Website: www.campbellsci.com.au

Brazil
Location: São Paulo, SP Brazil
Phone: 11.3732.3399
Email: vendas@campbellsci.com.br
Website: www.campbellsci.com.br

Canada
Location: Edmonton, AB Canada
Phone: 780.454.2505
Email: dataloggers@campbellsci.ca
Website: www.campbellsci.ca

China
Location: Beijing, P. R. China
Phone: 86.10.6561.0080
Email: info@campbellsci.com.cn
Website: www.campbellsci.com

Costa Rica
Location: San Pedro, Costa Rica
Phone: 506.2280.1564
Email: info@campbellsci.cc
Website: www.campbellsci.cc

France
Location: Vincennes, France
Phone: 0033.0.1.56.45.15.20
Email: info@campbellsci.fr
Website: www.campbellsci.fr

Germany
Location: Bremen, Germany
Phone: 49.0.421.460974.0
Email: info@campbellsci.de
Website: www.campbellsci.de

India
Location: New Delhi, DL India
Phone: 91.11.46500481.482
Email: info@campbellsci.in
Website: www.campbellsci.in

South Africa
Location: Stellenbosch, South Africa
Phone: 27.21.8809960
Email: sales@campbellsci.co.za
Website: www.campbellsci.co.za

Spain
Location: Barcelona, Spain
Phone: 34.93.2323938
Email: info@campbellsci.es
Website: www.campbellsci.es

Thailand
Location: Bangkok, Thailand
Phone: 66.2.719.3399
Email: thitipongc@campbellsci.asia
Website: www.campbellsci.asia

UK
Location: Shepshed, Loughborough, UK
Phone: 44.0.1509.601141
Email: sales@campbellsci.co.uk
Website: www.campbellsci.co.uk

USA
Location: Logan, UT USA
Phone: 435.227.9120
Email: info@campbellsci.com
Website: www.campbellsci.com