IRS21
Lufft Intelligent
Road Surface Sensor

User Manual

Issued 13.5.09

CSL 546

Guarantee

This equipment is guaranteed against defects in materials and workmanship. This guarantee applies for twelve months from date of delivery. We will repair or replace products which prove to be defective during the guarantee period provided they are returned to us prepaid. The guarantee will not apply to:

- Equipment which has been modified or altered in any way without the written permission of Campbell Scientific
- Batteries
- Any product which has been subjected to misuse, neglect, acts of God or damage in transit.

Campbell Scientific will return guaranteed equipment by surface carrier prepaid. Campbell Scientific will not reimburse the claimant for costs incurred in removing and/or reinstalling equipment. This guarantee and the Company's obligation thereunder is in lieu of all other guarantees, expressed or implied, including those of suitability and fitness for a particular purpose. Campbell Scientific is not liable for consequential damage.

Please inform us before returning equipment and obtain a Repair Reference Number whether the repair is under guarantee or not. Please state the faults as clearly as possible, and if the product is out of the guarantee period it should be accompanied by a purchase order. Quotations for repairs can be given on request.

When returning equipment, the Repair Reference Number must be clearly marked on the outside of the package.

Note that goods sent air freight are subject to Customs clearance fees which Campbell Scientific will charge to customers. In many cases, these charges are greater than the cost of the repair.

CAMPBELL SCIENTIFIC EUROPE
WHEN MEASUREMENTS MATTER

Campbell Scientific Ltd,
Campbell Park, 80 Hathern Road,
Shepshed, Loughborough, LE12 9GX, UK
Tel: +44 (0) 1509 601141
Fax: +44 (0) 1509 601091

Email: support@campbellsci.co.uk
www.campbellsci.co.uk

PLEASE READ FIRST

About this manual

Please note that this manual was originally produced by Campbell Scientific Inc. primarily for the North American market. Some spellings, weights and measures may reflect this origin.

Some useful conversion factors:

Area:	1 in^2 (square inch) = 645 mm^2
Length:	1 in. (inch) = 25.4 mm
	1 ft (foot) = 304.8 mm
	1 yard = 0.914 m
	1 mile = 1.609 km
Mass:	1 oz. (ounce) = 28.35 g
	1 lb (pound weight) = 0.454 kg
Pressure:	1 psi (lb/in^2) = 68.95 mb
Volume:	1 UK pint = 568.3 ml
	1 UK gallon = 4.546 litres
	1 US gallon = 3.785 litres

In addition, while most of the information in the manual is correct for all countries, certain information is specific to the North American market and so may not be applicable to European users.

Differences include the U.S standard external power supply details where some information (for example the AC transformer input voltage) will not be applicable for British/European use. *Please note, however, that when a power supply adapter is ordered it will be suitable for use in your country.*

Reference to some radio transmitters, digital cell phones and aerials may also not be applicable according to your locality.

Some brackets, shields and enclosure options, including wiring, are not sold as standard items in the European market; in some cases alternatives are offered. Details of the alternatives will be covered in separate manuals.

Recycling information

At the end of this product's life it should not be put in commercial or domestic refuse but sent for recycling. Any batteries contained within the product or used during the products life should be removed from the product and also be sent to an appropriate recycling facility.

Campbell Scientific Ltd can advise on the recycling of the equipment and in some cases arrange collection and the correct disposal of it, although charges may apply for some items or territories.

For further advice or support, please contact Campbell Scientific Ltd, or your local agent.

CAMPBELL SCIENTIFIC EUROPE
WHEN MEASUREMENTS MATTER

Campbell Scientific Ltd, Campbell Park, 80 Hathern Road, Shepshed, Loughborough, LE12 9GX, UK
Tel: +44 (0) 1509 601141 Fax: +44 (0) 1509 601091
Email: support@campbellsci.co.uk
www.campbellsci.co.uk

Contents

PDF viewers note: These page numbers refer to the printed version of this document. Use the Adobe Acrobat® bookmarks tab for links to specific sections.

Figures

IRS21 Lufft Intelligent Road Surface Sensor

1. Function

The IRS21 is a sensor that makes measurements of road surface. From measurements taken, the outputs are up to three temperatures, conductivity, percent salt, freezing temperature, road condition, and water film height. There is also an error status output from the sensor. The sensor is used for road weather stations.

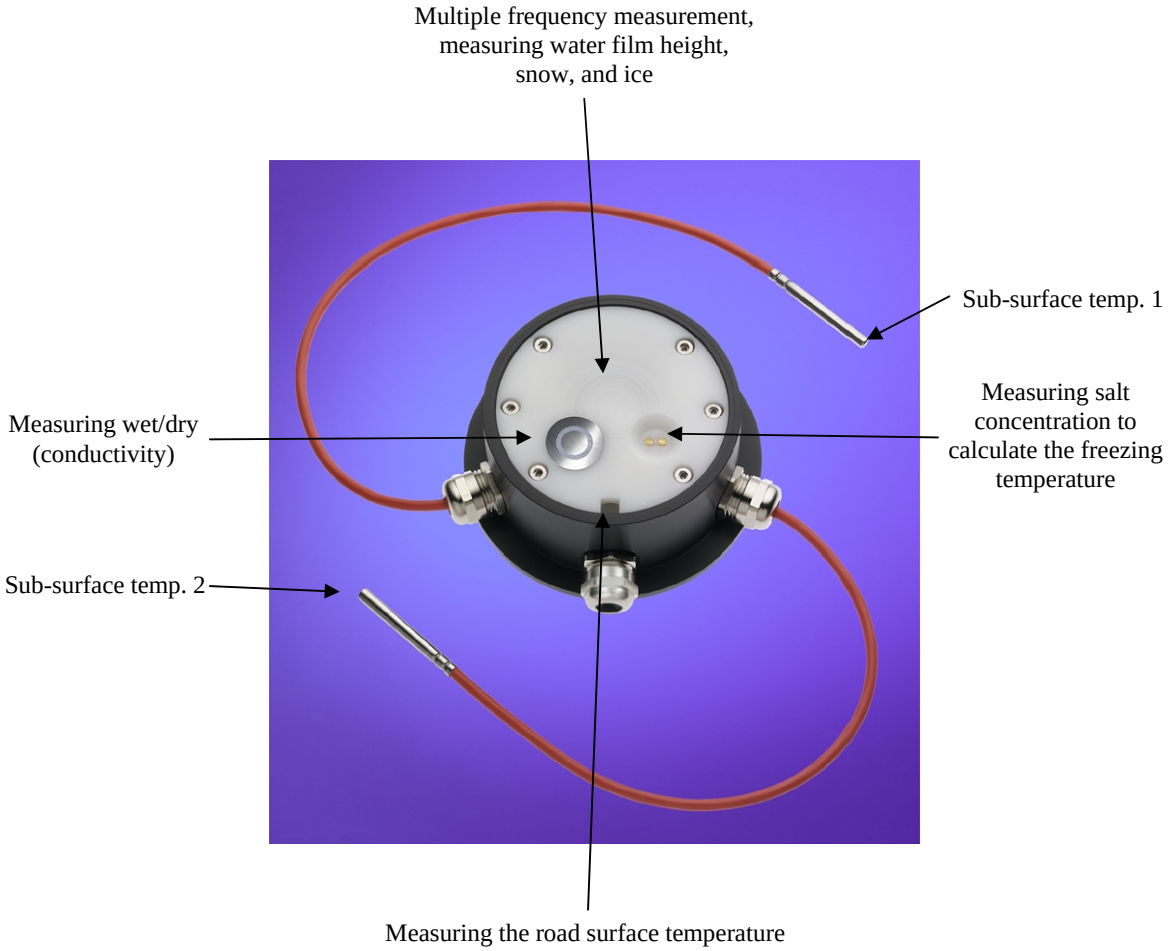

Figure 1-1. IRS21

2. Specifications

Dimensions:	13 cm (5”) in diameter, and 5 cm (3”) high
Weight:	0.9 kg (2 pounds)
Survival temperature:	-57°F to 158°F (-50° to 70°C)
Rated current:	less than 200 ma
Interface:	RS485
Standard cable length:	25m (75 feet)
Optional cable length:	up to 300’ (100M)
Power supply:	9 to 14 Vdc
Operating temperature:	-40° to 158°F (-40° to 70°C)
Operating relative humidity:	100%
Outputs	
Road condition:	dry, damp, wet, snow, freezing wetness, ice
Road temperature:	-40° to 158°F (-40° to 70°C)
Accuracy	±0.2°C (-10° to 10°C); ±0.5°C (-40° to 70°C)
Resolution	-.1°C
Freezing point:	-4° to 32°F
Accuracy	±.1°C
Resolution	-.1°C

3. Installation

Figure 3-1. Core cut for the road sensor.

Figure 3-2. Core drill and saw cutting equipment.

Figure 3-3. Saw cut is masked to control the epoxies.

Figure 3-4. View of fast steel which is placed under the sensor prior to epoxy application to provide a base for the sensor.

Figure 3-5. Weights are placed onto the levelling fixtures for the road sensor.

Figure 3-6. First pour of Fabick epoxy, (fast set), useable between 20° to 180°F.

Figure 3-7. Finished pour, with weights removed.

Figure 3-8. Second pour to bring the epoxy to grade.

Figure 3-9. Backer rod is used as a dam to control the epoxy.
Different epoxies can be used for directly around the sensor and along the cable.
Since the epoxy used is liquid, the backer rod is used to dam the epoxy until cured.

Figure 3-10. Compressed air is used to dry and clean the saw cut.

Figure 3-11. Application of the sensor cable epoxy.
The saw cut is two inches deep. The backer rod is placed in the length of the saw cut below and above the sensor cable before epoxy application.

Figure 3-12. Finished epoxy application.

Figure 3-13. A junction box is used when cable splices are needed.

4. Connections

4.1 Using SDM-SIO4

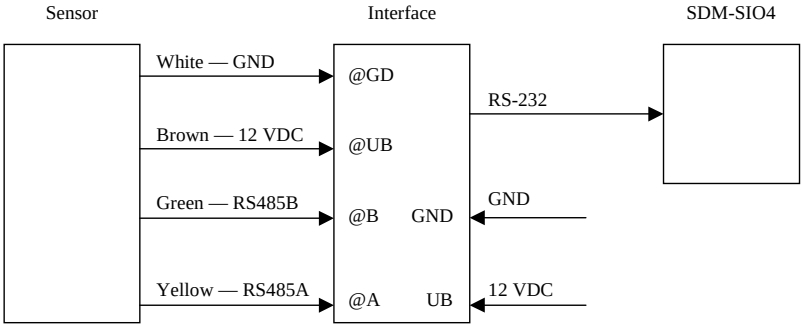

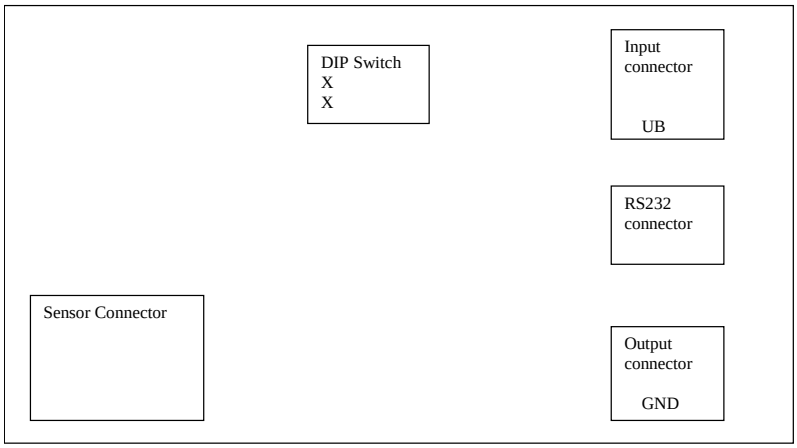

The interface has a two position dip switch that can change the interface from master to slave operation. For operation with the RWIS station the interface is set to master and each interface takes a port on the SDM-SIO4.

The switches in the two left hand positions as indicated by the X's above make the interface a master.

The sensors can be daisy chained. This is done by writing the address of the sensor with software available only to the manufacturer at this time. The sensor connections are made to the sensor connector.

The input connector and output connectors are used for daisy chain operation, but are also used to supply the 12 volts to the interface and sensor.

In the figure above power is applied to the input and output connectors.
12 volts is connected to the UB connection of the input connector from the power bus. Ground is connected from the power bus to the GND connection to the output connector.

4.2 Using SDM-SIO1

There is no requirement for the Lufft RS232 interface when using the SDM-SIO1. Each IRS21 requires its own SDM-SIO1 and up to 15 SDM-SIO1s can be connected to a single datalogger.

Power is supplied directly from the datalogger as shown in the diagram below.

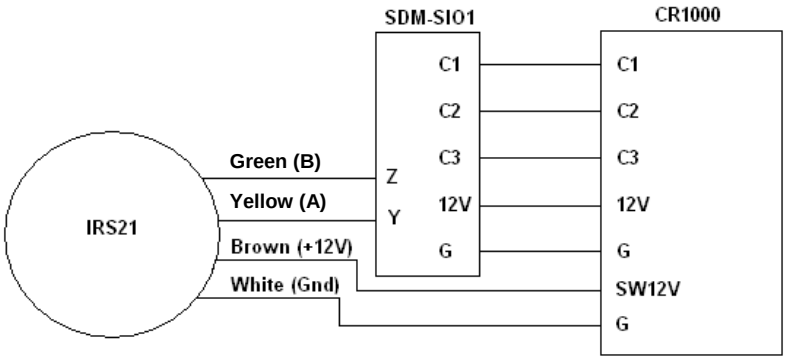

5. Operation

The sensor is operated at two-minute intervals. This is done to prevent measurement errors from sensor heating that could happen if the sensor were powered too long. The sensor is polled with a command that asks for:

Temperature 1
Temperature 2
Temperature 3
Salt concentration
Freezing temperature
Water film height
Road condition
Error status

Sensors purchased for the Campbell Scientific RWIS station are not optioned with the first two temperature sensors. For these applications, 107 probes are used for sub surface temperature measurements.

The data returned consists of the polling command and ASCII data. Spaces separate the data points.

In typical operation the sensor is run in table two in mixed array loggers, and slow sequence in PakBus loggers. The interval for the sensor is two minutes.

6. Programming

6.1 Using the SDM-SIO1

When using the SDM-SIO1 to interface the IRS21 to a CR1000 the RS485 output of the sensor is used. This makes the RS232 interface redundant. Control lines are set directly from the programme as are requests for data and the termination character.

```
'-----------------------------------------------------------------------------------------------------------
' Description...............:  Lufft IRS21 Road Sensor Example Program
'-----------------------------------------------------------------------------------------------------------
' Company..................:  Campbell Scientific Ltd
'-----------------------------------------------------------------------------------------------------------
' Notes.......................:  This sample program reads a Lufft IRS21 connected via an SDM-SIO1
' ...............................:  connected in RS-485 Half Duplex mode and then decodes the received
' ...............................:  string into meaningful data values, with English descriptions.
' ...............................:
' ...............................:          -------------------------------------------------------
' ...............................: Wiring: | Lufft IRS21      | CR1000    | SDM-SIO1                          |
' ...............................:          | --------------   | ----------  | --------------        |
' ...............................:          | Yellow (A)       |           | Y                     |
' ...............................:          | Green (B)        |           | Z                     |
' ...............................:          | Brown (+12V)     | SW12      |                       |
' ...............................:          | White (Gnd)      | G         |                       |
' ...............................:          |                  | C1        | C1                    |
' ...............................:          |                  | C2        | C2                    |
' ...............................:          |                  | C3        | C3                    |
' ...............................:          |                  | 12V       | 12V                   |
' ...............................:          ------------------------------------ --------------------
' ...............................:
'-----------------------------------------------------------------------------------------------------------
SequentialMode
```

```
'Connection Settings
Const Lufft_Port = 32 'Lufft | for SDM-SIO1 - Rotary Position 0, Port 32, SDM-SIO1.
Const Lufft_DataFormat = 51 'Lufft | 51 for SDM-SIO1 (RS-485 Half-Duplex) | 0 for COM Port (RS-232).
Const Lufft_ControlPort = 9 '9 = SW12 - the control port used to switch the lufft on/off.

'Buffering and Triggering
Const Lufft_BufferSize = 1000 'The buffer size in bytes.
Const Lufft_BaudRate = 19200 'The baud rate of the Lufft.
Const Lufft_TriggerString = "&A" & CHR(13) & CHR(10) 'This is the trigger string for the Lufft.
'Language - Lufft Surface Conditions - EN | English (UK)
Const Lufft_SurfaceCondition_Dry_EN = "Dry"
Const Lufft_SurfaceCondition_Damp_EN = "Damp"
Const Lufft_SurfaceCondition_Wet_EN = "Wet"
Const Lufft_SurfaceCondition_Icy_EN = "Icy"
Const Lufft_SurfaceCondition_FrostSnow_EN = "Frost / Snow"
Const Lufft_SurfaceCondition_ResidualSalt_EN = "Residual Salt"
Const Lufft_SurfaceCondition_FreezingWet_EN = "Freezing Wet"
Const Lufft_SurfaceCondition_Undefined_EN = "Undefined"
'Language - Lufft Error Conditions - EN | English (UK)
Const Lufft_ErrorCode_Ok_EN = "Ok"
Const Lufft_ErrorCode_TempFault_EN = "External Temperature Not Fitted"
Const Lufft_ErrorCode_Fault_EN = "Fault"
Const Lufft_ErrorCode_Undefined_EN = "Error Undefined"
'Lufft IRS21 incoming data variables and processed data.
Public Lufft_IncomingString As String * 50, Lufft_IncomingBytesReturned As Long
Public Lufft_BytesWaiting As Long
Public Lufft_Data(8), Lufft_String_Data(2) As String * 50
Alias Lufft_Data(1) = Lufft_SubSurfaceTemperature1 '6cm
Alias Lufft_Data(2) = Lufft_SubSurfaceTemperature2 '30cm
Alias Lufft_Data(3) = Lufft_SurfaceTemp
Alias Lufft_Data(4) = Lufft_SaltConcentration
Alias Lufft_Data(5) = Lufft_FreezingTemperature
Alias Lufft_Data(6) = Lufft_WaterFilmHeight
Alias Lufft_Data(7) = Lufft_SurfaceCondition
Alias Lufft_Data(8) = Lufft_ErrorCode
Alias Lufft_String_Data(1) = Lufft_SurfaceCondition_String_EN
Alias Lufft_String_Data(2) = Lufft_ErrorCode_String_EN

'This procedure takes a string returned from the Lufft IRS21 and splits
'it down into it's component parts.
Dim LufftWorking, ParseLufftData_LufftSourceString As String * 50
Dim ParseLufftData_SplitResults(8) As String
Alias ParseLufftData_SplitResults(1) = LufftResults_SubSurfaceTemp1
Alias ParseLufftData_SplitResults(2) = LufftResults_SubSurfaceTemp2
Alias ParseLufftData_SplitResults(3) = LufftResults_SurfaceTemp
Alias ParseLufftData_SplitResults(4) = LufftResults_SaltConcentration
Alias ParseLufftData_SplitResults(5) = LufftResults_FreezingTemp
Alias ParseLufftData_SplitResults(6) = LufftResults_WaterFilmHeight
Alias ParseLufftData_SplitResults(7) = LufftResults_SurfaceCondition
Alias ParseLufftData_SplitResults(8) = LufftResults_ErrorCode
Sub ParseLufftData(LufftSourceString As String * 50, LufftSourceStringLength As Long)
    If LufftSourceStringLength > 0 Then
        ParseLufftData_LufftSourceString = Trim(LufftSourceString)
        While InStr(1,ParseLufftData_LufftSourceString,"  ",2) <> 0
            ParseLufftData_LufftSourceString = Replace(ParseLufftData_LufftSourceString,"  "," ")
        Wend
         'Split the string into seperate sections
        SplitStr(ParseLufftData_SplitResults(),ParseLufftData_LufftSourceString," ",8,5)
         'External Temperature Sensor -1 - 6cm
        If InStr(1,Trim(UpperCase(LufftResults_SubSurfaceTemp1)),"X",2) <> 0 Then
```

```
    LufftWorking = NaN
Else
    LufftWorking = Trim(UpperCase(LufftResults_SubSurfaceTemp1))
    LufftWorking = (LufftWorking * 0.1) - 50
EndIf
Lufft_SubSurfaceTemperature1 = LufftWorking
'External Temperature Sensor -2 - 30cm
If InStr(1,Trim(UpperCase(LufftResults_SubSurfaceTemp2)),"X",2) <> 0 Then
    LufftWorking = NaN
Else
    LufftWorking = Trim(UpperCase(LufftResults_SubSurfaceTemp2))
    LufftWorking = (LufftWorking * 0.1) - 50
EndIf
Lufft_SubSurfaceTemperature2 = LufftWorking
'Internal Temperature Sensor - Road Surface
If InStr(1,Trim(UpperCase(LufftResults_SurfaceTemp)),"X",2) <> 0 Then
    LufftWorking = NaN
Else
    LufftWorking = Trim(UpperCase(LufftResults_SurfaceTemp))
    LufftWorking = (LufftWorking * 0.1) - 50
EndIf
Lufft_SurfaceTemp = LufftWorking
'Salt Concentration
If InStr(1,Trim(UpperCase(LufftResults_SaltConcentration)),"X",2) <> 0 Then
    LufftWorking = NaN
Else
    LufftWorking = Trim(UpperCase(LufftResults_SaltConcentration))
    LufftWorking = (LufftWorking * 0.1)
EndIf
Lufft_SaltConcentration = LufftWorking
'Freezing Temperature/Point
If InStr(1,Trim(UpperCase(LufftResults_FreezingTemp)),"X",2) <> 0 Then
    LufftWorking = NaN
Else
    LufftWorking = Trim(UpperCase(LufftResults_FreezingTemp))
    LufftWorking = (LufftWorking * -0.1)
EndIf
Lufft_FreezingTemperature = LufftWorking
'Water Film Thickness/Height
If InStr(1,Trim(UpperCase(LufftResults_WaterFilmHeight)),"X",2) <> 0 Then
    LufftWorking = NaN
Else
    LufftWorking = Trim(UpperCase(LufftResults_WaterFilmHeight))
    LufftWorking = (1560 - 16.55 * LufftWorking + 0.041 * LufftWorking^2) / 1000
EndIf
Lufft_WaterFilmHeight = LufftWorking
'Road Condition
Lufft_SurfaceCondition = LufftResults_SurfaceCondition
Select Case Lufft_SurfaceCondition
    Case 0
        Lufft_SurfaceCondition_String_EN = Lufft_SurfaceCondition_Dry_EN
    Case 1
        Lufft_SurfaceCondition_String_EN = Lufft_SurfaceCondition_Damp_EN
    Case 2
        Lufft_SurfaceCondition_String_EN = Lufft_SurfaceCondition_Wet_EN
    Case 3
        Lufft_SurfaceCondition_String_EN = Lufft_SurfaceCondition_Icy_EN
    Case 4
        Lufft_SurfaceCondition_String_EN = Lufft_SurfaceCondition_FrostSnow_EN
    Case 5
```

```
            Lufft_SurfaceCondition_String_EN = Lufft_SurfaceCondition_ResidualSalt_EN
        Case 6
            Lufft_SurfaceCondition_String_EN = Lufft_SurfaceCondition_FreezingWet_EN
        Case Else
            Lufft_SurfaceCondition_String_EN = Lufft_SurfaceCondition_Undefined_EN
    EndSelect
    'Error Status
    Lufft_ErrorCode = LufftResults_ErrorCode
    Select Case Lufft_ErrorCode
        Case 0
            Lufft_ErrorCode_String_EN = Lufft_ErrorCode_Ok_EN
        Case 1
            Lufft_ErrorCode_String_EN = Lufft_ErrorCode_TempFault_EN
        Case Is > 1
            Lufft_ErrorCode_String_EN = Lufft_ErrorCode_Fault_EN
        Case Else
            Lufft_ErrorCode_String_EN = Lufft_ErrorCode_Undefined_EN
    EndSelect
  Else
    'Invalid Data String
    Lufft_SurfaceTemp = NaN
    Lufft_SubSurfaceTemperature1 = NaN
    Lufft_SubSurfaceTemperature2 = NaN
    Lufft_SaltConcentration = NaN
    Lufft_FreezingTemperature = NaN
    Lufft_WaterFilmHeight = NaN
    Lufft_SurfaceCondition = NaN
    Lufft_SurfaceCondition_String_EN = ""
    Lufft_ErrorCode = NaN
    Lufft_ErrorCode_String_EN = ""
  EndIf
EndSub

'Main Program
BeginProg

  Scan (60,Sec,0,0)
    'Read the IRS21 every 2 Minutes - do not read more often than every 60 seconds.
    'Also try not to keep the sensor powered for alot longer than 2 seconds each time for
    'maximum effectiveness.
    If TimeIntoInterval(0,2,Min) Then
        'Lufft - IRS21
        'Switch on the sensor and wait for it to warm-up.
        PortSet(Lufft_ControlPort,1) : Delay(0,2,Sec)
        'Open the serial port ready for reading.
        SerialOpen(Lufft_Port,Lufft_BaudRate,Lufft_DataFormat,100,Lufft_BufferSize)
        'Trigger the Lufft to output.
        SerialOut(Lufft_Port,Lufft_TriggerString,"",0,100) : Delay(1,500,mSec)
        Lufft_BytesWaiting = SerialInChk(Lufft_Port) AND 4095
        SerialIn(Lufft_IncomingString,Lufft_Port,100,CHR(10),Lufft_BytesWaiting)
        Lufft_IncomingBytesReturned = Len(Lufft_IncomingString)
        'Extract and decode the lufft data.
        ParseLufftData(Lufft_IncomingString,Lufft_IncomingBytesReturned)
        'Close the serial port and turn off the sensor
        SerialClose(Lufft_Port) : PortSet(Lufft_ControlPort,0).
    EndIf
  NextScan

EndProg
```

6.1.1 CR1000 Program using the SDM-SIO4

```
'CR1000 Series Datalogger
'To create a different opening program template, type in new
'instructions and select Template | Save as Default Template
'date:
'program author:

'Declare Public Variables
'Example:
Public sio4result,counter,a
Public sensordata(8)
dim reqdata(17)
dim datafilter(18)
dim portset(22)
alias sensordata(1)=temperature1
alias sensordata(2)=temperature2
alias sensordata(3)=SurTmp0
alias sensordata(4)=SurSal0
alias sensordata(5)=SurFrePn0
alias sensordata(6)=SurWatDp0
alias sensordata(7)=SurSta0
alias sensordata(8)=PavSenEr0

'Declare Other Variables
'Example:
'Dim Counter

'Declare Constants
'Example:
'CONST PI = 3.141592654

DataTable (road,True,10)
    Sample (1,temperature1,FP2)
    Sample (1,temperature2,FP2)
    Sample (1,SurTmp0,FP2)
    Sample (1,SurSal0,FP2)
    Sample (1,SurFrePn0,FP2)
    Sample (1,SurWatDp0,FP2)
    Sample (1,SurSta0,FP2)
    Sample (1,PavSenEr0,FP2)
EndTable

'Define Subroutines
'Sub
Sub sio4setup

    'request data string    &&A^M^J     #1
    data 115,116,114,115,116,32,49,32,34,38,38,65,94,77,94,74,34
    for a=1 to 17 : read reqdata(a) : next a
    SDMSIO4 (reqdata(),1,0,4,321,0000,0000,17,1.0,0)

    Delay (1,2,Sec)

    'data filter string    ffffffff     #2
    data 102,108,116,115,116,32,50,32,34,102,102,102,102,102,102,102,102,34
    for a=1 to 18 : read datafilter(a) : next a
    SDMSIO4 (datafilter(),1,0,4,321,0000,0000,18,1.0,0)

    Delay (1,2,Sec)
```

```
    'port setup  for port 4    4 13 3 0 0 9 0
    data 112,111,114,116,115,101,116,32,52,32,49,51,32,51,32,48,32,48,32,57,32,48
    for a=1 to 22 : read portset(a) : next a
    SDMSIO4 (portset(),1,0,4,321,0000,0000,22,1.0,0)

    Delay (1,2,Sec)

EndSub

'Main Program
BeginProg

        'Enter other measurement instructions
        'Call Output Tables
        'Example:

    SlowSequence
    Scan (120,Sec,3,0)      'irs21

        'rts hi to send polling string, dtr hi to power the road sensor
        SDMSIO4 (sio4result,1,0,4,1027,0022,0000,0,1.0,0)
        Delay (1,1,Sec)
        SDMSIO4 (sio4result,1,0,4,1027,0010,0,0,1.0,0)
        'rts lo to send data to the sensor
        SDMSIO4 (sio4result,1,0,4,1024,0001,0000,0,1.0,0)
        Delay (1,1,mSec)
        'rts hi to receive data from the sensor
        SDMSIO4 (sio4result,1,0,4,1027,0020,0000,0,1.0,0)
        Delay (1,1,Sec)
        'dtr lo to turn the sensor off
        SDMSIO4 (sio4result,1,0,4,1027,0001,0000,0,1.0,0)
        Delay (1,1,Sec)
        'send the filter
        SDMSIO4 (datafilter(),1,0,4,2054,9002,0000,18,1.0,0)
        'read the sio4
        SDMSIO4 (sensordata(),1,0,4,4,0000,0000,8,1.0,0)
        Delay (1,1,Sec)

        SurTmp0=(SurTmp0*.1)-50
        SurSal0=(SurSal0*.1)
        SurFrePn0=(SurFrePn0*.1)*-1
        SurWatDp0=((1560)-(16.55*SurWatDp0)+(.041*SurWatDp0^2))/1000

        CallTable road

    NextScan
EndProg
```

6.2 Using SDM-SIO4

The sensor is first powered with the DTR line set high. Then the RTS is set low to send data to the sensor. In this case the polling command will be sent to the sensor. As soon as the polling command is sent, RTS is set high to get data back from the sensor. In as short a time as is possible by the programming. RTS is set high to receive the data. Then the receive filter is sent to the SDM-SIO4, and data is retrieved by the logger.

In both programs below the sio4 is set up with code at the start of the program. This ensures that if there is a reset or power is lost, the startup will configure the SDM-SIO4 without having to connect to the sio4 to configure the device.

The calculations after reading the SDM-SIO4 are used to convert raw data measurements from the sensor to measurements such as degrees, and film thickness.

6.2.1 CR10X Program

```
;{CR10X-TD}
;
*Table 1 Program
  01:  60              Execution Interval (seconds)

;nosensor initialization

1:  If (X<=>F) (P89)
  1:   93              X Loc [ inp_init      ]
  2:   1               =
  3:   0               F
  4:   1               Call Subroutine 1

2:  Z=F x 10^n (P30)
  1:   1               F
  2:   0               n, Exponent of 10
  3: 93                Z Loc [ inp_init      ]

*Table 2 Program
  02:  120             Execution Interval (seconds)

;start irs21 sensor 1
;the polling string to send to the sensor for measurement is strst 1 "&26&41&0D&0A"
;the filter string for the sio4 is fltst 12 "n9Fn1Fn1fn3Fn1Fn3fff"
;the port setup is portset 3 13 3 0 0 9 0
;this sensor is set up for 19.2 kbaud, no parity, 8 data bits, 1 stop bit

;dtr hi to power the interface and puck and rts high for data to logger

1:  SDM-SIO4 (P113)
  1:   1               Reps
  2:   0               Address
  3:   3               Send/Receive Port 3
  4:   1027            Command
  5:   0022            1st Parameters
  6:   0000            2nd Parameters
  7:   0               Values per Rep
  8:   1               Loc [ dummy         ]
  9:   1.0             Mult
  10:  0.0             Offset

2:  Delay w/Opt Excitation (P22)
  1:   1               Ex Channel
  2:   0               Delay W/Ex (0.01 sec units)
  3:   250             Delay After Ex (0.01 sec units)
  4:   0               mV Excitation

;rts lo to send data to sensor

3:  SDM-SIO4 (P113)
```

```
  1:  1          Reps
  2:  0          Address
  3:  3          Send/Receive Port 3
  4:  1027       Command
  5:  0010       1st Parameters
  6:  0000       2nd Parameters
  7:  0000       Values per Rep
  8:  1          Loc [ dummy      ]
  9:  1.0        Mult
  10: 0.0        Offset

;&A<cr> to sensor

4:  SDM-SIO4 (P113)
  1:  1          Reps
  2:  0          Address
  3:  3          Send/Receive Port 3
  4:  1024       Command
  5:  0001       1st Parameters
  6:  0000       2nd Parameters
  7:  0          Values per Rep
  8:  1          Loc [ dummy      ]
  9:  1.0        Mult
  10: 0.0        Offset

5:  Delay w/Opt Excitation (P22)
  1:  1          Ex Channel
  2:  0          Delay W/Ex (0.01 sec units)
  3:  1          Delay After Ex (0.01 sec units)
  4:  0          mV Excitation

;rts hi to receive data from the sensor

6:  SDM-SIO4 (P113)
  1:  1          Reps
  2:  0          Address
  3:  3          Send/Receive Port 3
  4:  1027       Command
  5:  0020       1st Parameters
  6:  0000       2nd Parameters
  7:  0000       Values per Rep
  8:  1          Loc [ dummy      ]
  9:  1.0        Mult
  10: 0.0        Offset

7:  Delay w/Opt Excitation (P22)
  1:  1          Ex Channel
  2:  0          Delay W/Ex (0.01 sec units)
  3:  50         Delay After Ex (0.01 sec units)
  4:  0          mV Excitation

;dtr low to turn the interface and sensor off

8:  SDM-SIO4 (P113)
  1:  1          Reps
  2:  0          Address
  3:  3          Send/Receive Port 3
  4:  1027       Command
  5:  0001       1st Parameters
  6:  0          2nd Parameters
```

```
  7:  0          Values per Rep
  8:  1          Loc [ dummy      ]
  9:  1.0        Mult
  10: 0.0        Offset

;send filter to sio4

9:  SDM-SIO4 (P113)
  1:  1          Reps
  2:  0          Address
  3:  3          Send/Receive Port 3
  4:  2054       Command
  5:  9012       1st Parameters
  6:  0000       2nd Parameters
  7:  0000       Values per Rep
  8:  1          Loc [ dummy      ]
  9:  1.0        Mult
  10: 0.0        Offset

10:  Delay w/Opt Excitation (P22)
  1:  1          Ex Channel
  2:  0          Delay W/Ex (0.01 sec units)
  3:  1          Delay After Ex (0.01 sec units)
  4:  0          mV Excitation

;read the sio4

11:  SDM-SIO4 (P113)
  1:  1          Reps
  2:  0          Address
  3:  3          Send/Receive Port 3
  4:  4          Command
  5:  0000       1st Parameters
  6:  0000       2nd Parameters
  7:  8          Values per Rep
  8:  2          Loc [ pavt1_1     ]
  9:  1.0        Mult
  10: 0.0        Offset

intemp=(pavt1_3*.1)-50
salt=pavt1_4*.1
freztemp=pavt1_5*.1
waterflm=(1560-(16.55*pavt1_6)+(.041*pavt1_6*pavt1_6))/1000


*Table 3 Subroutines
;start of sdm-sio4 setup

1:  Beginning of Subroutine (P85)
  1   1          Subroutine 1

;data filter

    2:  Bulk Load (P65)
      1:  102        F ;f
      2:  108        F ;l
      3:  116        F ;t
      4:  115        F ;s
      5:  116        F ;t
      6:  32         F ;space
```

```
    7:  49          F ;1
    8:  50          F ;2
    9:  10          Loc [ flt1_1      ]

  3:  Bulk Load (P65)
    1:  32          F ;space
    2:  34          F ;"
    3:  110         F ;n
    4:  57          F ;9
    5:  70          F ;F
    6:  110         F ;n
    7:  49          F ;1
    8:  70          F ;F
    9:  18          Loc [ flt9_1      ]

  4:  Bulk Load (P65)
    1:  110         F ;n
    2:  49          F ;1
    3:  102         F ;f
    4:  110         F ;n
    5:  51          F ;3
    6:  70          F ;F
    7:  110         F ;n
    8:  49          F ;1
    9:  26          Loc [ flt17_1     ]

  5:  Bulk Load (P65)
    1:  70          F ;F
    2:  110         F ;n
    3:  51          F ;3
    4:  102         F ;f
    5:  102         F ;f
    6:  102         F ;f
    7:  34          F   ;"
    8:  0           F ;
    9:  34          Loc [ flt25_1     ]

;request data string

  6:  Bulk Load (P65)
    1:  115         F ;s
    2:  116         F ;t
    3:  114         F ;r
    4:  115         F ;s
    5:  116         F ;t
    6:  32          F ;space
    7:  49          F ;1
    8:  32          F ;space
    9:  42          Loc [ st1_1       ]
```

```
7:  Bulk Load (P65)
      1:   34          F ;"
      2:   38          F ;&
      3:   50          F ;2
      4:   54          F ;6
      5:   38          F ;&
      6:   52          F ;4
      7:   49          F ;1
      8:   38          F ;&
      9:   50          Loc [ st9_1        ]

    8:  Bulk Load (P65)
      1:   48          F ;0
      2:   68          F ;D
      3:   38          F ;&
      4:   48          F ;0
      5:   65          F ;A
      6:   34          F ;"
      7:   0           F
      8:   0           F
      9:   58          Loc [ st17_1       ]

;sdm-s014 portset

    9:  Bulk Load (P65)
      1:   112         F ;p
      2:   111         F ;o
      3:   114         F ;r
      4:   116         F ;t
      5:   115         F ;s
      6:   101         F ;e
      7:   116         F ;t
      8:   32          F ;space
      9:   66          Loc [ port1_1      ]

    10:  Bulk Load (P65)
      1:   51          F ;3
      2:   32          F ;space
      3:   49          F ;1
      4:   51          F ;3
      5:   32          F ;space
      6:   51          F ;3
      7:   32          F ;space
      8:   48          F ;0
      9:   74          Loc [ port9_1      ]

    11:  Bulk Load (P65)
      1:   32          F ;space
      2:   48          F ;0
      3:   32          F ;space
      4:   57          F ;9
      5:   32          F ;space
      6:   48          F ;0
      7:   0           F
      8:   0           F
      9:   82          Loc [ port17_1     ]

;portset

    12:  SDM-SIO4 (P113)
```

```
        1:  1          Reps
        2:  0          Address
        3:  5          Send to all four ports
        4:  321        Command
        5:  0          1st Parameters
        6:  0          2nd Parameters
        7:  22         Values per Rep
        8:  66         Loc [ port1_1      ]
        9:  1.0        Multiplier
        10: 0.0        Offset

;data filter

     13:  SDM-SIO4 (P113)
        1:  1          Reps
        2:  0          Address
        3:  1          Send/Receive Port 1
        4:  321        Command
        5:  0          1st Parameters
        6:  0          2nd Parameters
        7:  31         Values per Rep
        8:  10         Loc [ flt1_1       ]
        9:  1.0        Multiplier
        10: 0.0        Offset

;request data

     14:  SDM-SIO4 (P113)
        1:  1          Reps
        2:  0          Address
        3:  1          Send/Receive Port 1
        4:  321        Command
        5:  0          1st Parameters
        6:  0          2nd Parameters
        7:  22         Values per Rep
        8:  42         Loc [ st1_1        ]
        9:  1.0        Multiplier
        10: 0.0        Offset

15:  End (P95)

End Program
```

CAMPBELL SCIENTIFIC COMPANIES

Campbell Scientific, Inc. (CSI)
815 West 1800 North
Logan, Utah 84321
UNITED STATES
www.campbellsci.com
info@campbellsci.com

Campbell Scientific Africa Pty. Ltd. (CSAf)
PO Box 2450
Somerset West 7129
SOUTH AFRICA
www.csafrica.co.za
sales@csafrica.co.za

Campbell Scientific Australia Pty. Ltd. (CSA)
PO Box 444
Thuringowa Central
QLD 4812 AUSTRALIA
www.campbellsci.com.au
info@campbellsci.com.au

Campbell Scientific do Brazil Ltda. (CSB)
Rua Luisa Crapsi Orsi, 15 Butantã
CEP: 005543-000 São Paulo SP BRAZIL
www.campbellsci.com.br
suporte@campbellsci.com.br

Campbell Scientific Canada Corp. (CSC)
11564 - 149th Street NW
Edmonton, Alberta T5M 1W7
CANADA
www.campbellsci.ca
dataloggers@campbellsci.ca

Campbell Scientific Ltd. (CSL)
Campbell Park
80 Hathern Road
Shepshed, Loughborough LE12 9GX
UNITED KINGDOM
www.campbellsci.co.uk
sales@campbellsci.co.uk

Campbell Scientific Ltd. (France)
Miniparc du Verger - Bat. H
1, rue de Terre Neuve - Les Ulis
91967 COURTABOEUF CEDEX
FRANCE
www.campbellsci.fr
info@campbellsci.fr

Campbell Scientific Spain, S. L.
Psg. Font 14, local 8
08013 Barcelona
SPAIN
www.campbellsci.es
info@campbellsci.es

Campbell Scientific Ltd. (Germany)
Fahrenheitstrasse13, D-28359 Bremen
GERMANY
www.campbellsci.de
info@campbellsci.de

Please visit www.campbellsci.com to obtain contact information for your local US or International representative.